Electrolux

thermaline

Operating and installation instructions

(Translation of the original operating instructions)

DOC no. 87.8020.01 - EN

Edition 1 (10-2012)

Pro Thermetic

TILTING BOILING PAN PBOT MODEL

Electrically heated | PBOT-E

CONTENT OVERVIEW

CONTENT OVERVIEW ... 2
FOREWORD ... 4
1. GENERAL INFORMATION ... 5
1.1 INTRODUCTION ... 5
1.2 IDENTIFYING YOUR COOKING APPLIANCE ... 5
1.2.1 Cooking appliance identification plate ... 5
1.2.2 Pressure tank identification plate ... 5
1.2.3 Meaning of the identification plate fields ... 5
1.3 LIABILITY ... 6
1.3.1 Storing the operating instructions ... 6
1.3.2 Operating instruction s recipient ... 6
1.4 GENERAL INFORMATION ... 6
1.4.1 Explanation of markings and symbols ... 6
1.4.2 Installation and commissioning ... 6
1.4.3 Operator's obligations ... 7
1.4.4 Intended use ... 7
1.4.5 Safety ... 7
1.4.6 Handling industrial cooking appliances ... 8
1.4.7 Customer services, service, repair and maintenance work ... 9
1.4.8 Maintenance periods ... 9
1.5 ENVIRONMENTAL PROTECTION ... 9
1.5.1 Packaging ... 9
1.5.2 Disposal ... 9
1.6 CLEANING ... 10
1.6.1 Suitable cleaning products ... 10
1.6.2 Cleaning instructions ... 10
1.6.3 Cleaning the appliance ... 10
1.7 TRANSPORT, HANDLING AND STORAGE ... 10
1.7.1 Introduction ... 10
1.7.2 Unloading ... 11
1.7.3 Handling instructions ... 11
1.7.4 Moving the appliance and setting down the load ... 11
1.7.5 Storage ... 11
2. APPLIANCE FUNCTIONS AND EQUIPMENT ... 12
2.1 OVERVIEW ... 12
2.2 APPLIANCE FUNCTION ... 12
2.3 DESIGN AND SET UP ... 12
2.3.1 Brief description of the most important working parts ... 13
2.4 EXTENSION OPTIONS ... 13
2.5 TESTS/ CERTIFICATES ... 13
3. TECHNICAL SPECIFICATIONS ... 14
3.1 VALIDITY AND IDENTIFICATION ... 14
3.2 APPLIANCE MODEL CODING ... 14
3.3 TECHNICAL DOCUMENTATION ... 14
3.4 TYPE OF INSTALLATION ... 14
3.5 STANDARD APPLIANCES ... 14
3.6 APPLIANCES WITH STIRRER ... 15
3.7 TECHNICAL DETAILS ... 15
3.7.1 Sub-systems ... 15
3.7.2 Performance data: Water heating times ... 15
4. INSTALLATION AND ASSEMBLY ... 16
4.1 DIMENSION DRAWINGS FOR FLOOR AND WALL INSTALLATION ... 16
4.1.1 Floor and wall mounted appliances ... 16
4.1.2 Wall mounted appliances ... 17
4.2 INSTALLATION DIAGRAMS AND CONNECTIONS ... 17
4.2.1 Floor and wall mounted appliances ... 18
4.2.2 Wall mounted appliances ... 19
4.3 FLOOR OUTLET AND GUTTERS ... 20
4.4 APPLIANCE INSTALLATION ... 20
4.5 ACCESS TO THE INSIDE OF THE APPLIANCE ... 21
4.5.1 Removing panel fronts ... 21
4.5.2 Removing panel cover ... 21
4.5.3 Removing service cover ... 21
4.5.4 Removing side walls ... 21
4.5.5 Removing protective covers ... 21

CONTENT OVERVIEW

4.5.6 Refitting all covers ... 21
4.6 ASSEMBLY AND SET UP ... 22
4.6.1 Floor installation: free-standing or standing against a wall ... 22
4.6.2 Wall installation: wall-mounted ... 23
4.7 ASSEMBLING APPLIANCE GROUPS ... 24
4.8 ELECTRICAL CONNECTION ... 25
4.8.1 Connectors ... 25
4.8.2 Connecting to a potential equalisation system ... 26
4.8.3 Potential-free contact (PC) ... 26
4.8.4 Performance optimisation systems (EO) ... 26
4.8.5 Wiring ... 26
4.9 MIXER TAP ... 27
4.9.1 Drinking water connection ... 27
4.9.2 Appliance: wall-mounted or standing against a wall ... 27
4.9.3 Appliance: Wall-mounted ... 27
4.10 DUAL CASING ... 28
4.10.1 Commissioning ... 28
4.10.2 Insufficient water in dual casing ... 28
4.10.3 Topping up demineralised water ... 28
4.10.4 Draining dual casing ... 28
5. COMMISSIONING ... 29
5.1 PREPARATION ... 29
5.2 ADDING THE FOOD ... 29
5.3 DECOMMISSIONING ... 29
6. CHECK LIST: COMMISSIONING ... 30
7. CHECK LIST: MAINTENANCE ... 31
8. OPERATING THE TOUCH CONTROL ... 32
8.1 DESCRIPTION OF THE CONTROL PANEL ... 32
8.2 OPERATING THE MAIN FUNCTIONS ... 32
8.2.1 Main selection menu ... 32
8.2.2 Default settings ... 32
8.2.3 Manual ... 33
8.2.4 Phase ... 33
8.2.5 Temperature selection (in °Celsius) ... 33
8.2.6 Temperature selection (via power levels) ... 33
8.2.7 Selecting cooking time (entering time and continuous cooking) ... 34
8.2.8 Delayed start ... 34
8.2.9 Soft cooking ... 34
8.2.10 Stirrer modes 1-3 with stirrer ... 35
8.2.11 Saving programmes ... 35
8.2.12 Programmes ... 35
8.3 OPERATION AND METHODS OF YOUR COOKING APPLIANCE ... 36
8.3.1 Cooking with target value temperature and cooking time ... 36
8.3.2 Cooking with target value power levels and cooking time ... 36
8.4 ERROR AND ALARM MESSAGES ... 36
9. OPERATING THE SUB-SYSTEMS ... 37
9.1 APPLIANCE TILTING DEVICE ... 37
9.2 STIRRER ... 37
9.2.1 Inserting the stirrer ... 37
9.2.2 Operating the stirrer ... 37
9.2.3 Safety measures ... 37
9.2.4 Lid safety switch ... 38
9.2.5 Emergency stop switch ... 38
9.3 DRAIN TAP ... 39
9.3.1 Removing food ... 39
9.3.2 Removing the drain tap ... 39
9.3.3 Servicing the drain tap ... 39
10. ACCESSORIES ... 40

FOREWORD

The operating and installation instructions provide the user with useful information for operating the machine or cooking appliance safely and make it easy for him to operate the tilting boiling pan.
The following description will not be a boring, tedious list of instructions and warnings but a range of aids that are suitable for optimising the appliance performance in every respect and will help prevent incorrect use and handling that could cause cause injury to people and animals and material damage.
It is very important that all people entrusted with the transport, installation, commissioning, use, maintenance, repair and disposal of the appliances read the operating instructions carefully prior to dealing with the appliance in order to prevent incorrect operating steps or errors as a result of which the appliance could be damaged or which could constitute a risk of accident for those people.
The operating instructions must always be available to the operating staff and therefore be stored at the workplace in an easily accessible place where they can be consulted at any time in case of doubt or when required.
Should you have any doubts or uncertainties concerning the use of the machine or cooking appliance after reading the operating and installation instructions, please contact Electrolux Professional or your closest customer service centre who will gladly assist you to optimise the performance of the appliance.
It must be remembered that when using the appliance the relevant regulations with respect to safety, work hygiene and environmental protection must be complied with. It is therefore the duty of the user to ensure that the appliance is always used in safety conditions that are optimum for persons, animals and material items.
The manufacturer does not accept any liability for damage that arises from improper storage or misuse. No product liability is accepted for unauthorised adaptations and modifications that do not comply with the instructions in this handbook or additional supplements such as assembly instructions. In some circumstances this will invalidate the guarantee.

Manufacturer:
Electrolux Professional AG
Allmendstrasse 28
CH - 6210 Sursee / Switzerland

Documentation:
Electrolux Professional AG
Tech. Docu Services
CH - 6210 Sursee / Switzerland

Original version: German.
Other language versions are available from Electrolux Professional Customer Services.
Subject to misprints, errors and alterations.

1 GENERAL INFORMATION

1.1 INTRODUCTION

Thank you for choosing a quality product from the *Electrolux Thermaline* Pro Thermetic - product range. Read the instructions in this document carefully. They contain important information on installation and operational safety as well as on the use and maintenance of the appliance. Store the documents so that they are always available for users. These instructions relate to various appliance models.

1.2 Identifying your cooking appliance

You will find the precise model name of your cooking appliance on the identification plate under "F.Mod". Further details and specifications of your model can be found in *→Chapter 2, Appliance function and equipment and →Chapter 3 "Technical specifications"*.

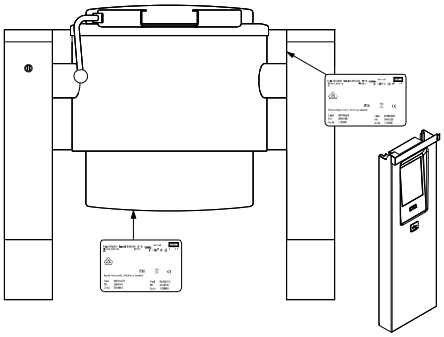

1.2.1 Cooking appliance identification plate

The identification plate is located on the top outside and top inside of the right panel of each appliance (visible after removing the control panel).

The 8-digit series number YWWXXXXX on the ID plate is compiled as follows:

Y is the last figure of the year of manufacture
WW stands for the week of manufacture
XXXXX is the consecutive serial number

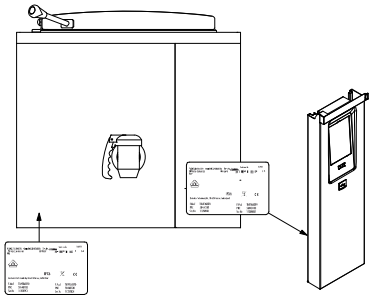

1.2.2 Pressure tank identification plate*

The identification plate is located on the underside of the dual casing and can be seen after removing the pan base.
** (only appliances with pressure tank)*

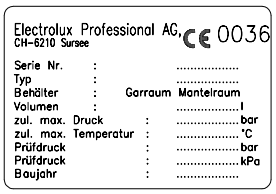

1.2.3 Meaning of the identification plate fields

F.Mod .....(A) Appliance model
Comm.Model.....(B) Trade name
Ser.No.....(C) Serial number
Swiss made .....(D) Place of manufacture
99-9999 .....(E) Month - year of manufacture
PNC .....(F) Product number code
EL: .....(G) Voltage [V]
(H) Number of live/ neutral conductors
Hz.....(I) Power frequency [Hz]
kW.....(J) Power consumption [kW]
A.....(K) Current consumption [A]
EL: .....(L) Additional information
Xxx.....(M) Test centre/ certification
ELX .....(N) Manufacturer:
Electrolux Professional AG
Allmendstrasse 28
CH-6210 Sursee (Switzerland)
IPX .....(O) Water protection class
CE .....(P) CE mark

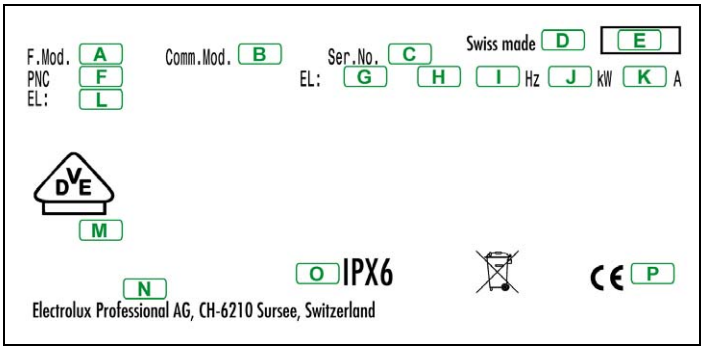

1.3 LIABILITY

The manufacturer is exempted from product liability in the following cases:

- Disregarding the information in the present operating instructions.
- Repairs that were performed improperly and the use of spare parts that are not listed in the spare parts catalogue (the installation and use of non-original spare parts or non-original accessories can cause permanent damage to the operation of the appliance).
- Interventions by unqualified technicians.
- Unapproved modifications or interventions.
- Negligent maintenance.
- Improper use of appliance.
- Spraying the appliance with a strong water or steam jet or using a high pressure cleaner is not permitted. The use of harsh cleaning agents or acids must be expressly avoided.
- Exceptional unforeseeable circumstances.

Non-compliance with the regulations for workplace safety, hygiene and health that are in effect in the appliance user's country.

Furthermore, any liability for damage that is caused by conversions and independent modifications made by the user or the customer will be refused.

The responsibility for the selection of the appropriate individual means of protection for the operating staff shall remain with the employer or with the safety officer at the workplace in accordance with the provisions in effect in the appliance user's country.

Read the whole of the installation instructions carefully before you install and operate the appliance. Any additions and amendments to the operating instructions that the manufacturer may send to the customer shall form an integral part of the operating instructions and must be stored together with them.

Electrolux Professional shall bear no responsibility for any inaccuracies in the operating instructions and installation instructions that are due to printing or translation errors.

1.3.1 Storing the operating instructions

The operating instructions must be kept intact for the whole life cycle of the appliance up until it is disposed of.
The operating instructions must always accompany the appliance if it is transferred, sold, rented, allowed to be used by others or leased.

1.3.2 Operating instruction recipients

The operating instructions are intended for:

- staff who are responsible for transport and handling.
- installers who set up and commission the appliance.
- the employer of the appliance users and the safety officer at the workplace.
- the staff who operate the appliance.
- specialist engineers from Customer Services *(→see electrical wiring diagram and service manual).*
- the people responsible for disposal.

1.4 GENERAL INFORMATION

1.4.1 Explanation of markings and symbols

- **IMPORTANT!**
  Risk to the health and safety of employees
- **NOTE!**
  Important instruction that must always be obeyed.

1.4.2 Installation and commissioning

- The installation and initial operation of the appliance must be properly carried out in accordance with the manufacturer's instructions and may only be done by an authorised specialist from Electrolux Professional.
- The electricity and gas supply must be installed by a certified specialist under consideration of the country-specific and local regulations. You are completely responsible for this.
- The appliance may not be operated without the user first familiarising himself/herself with its use. The operating instructions and the safety precautions must be followed carefully. Follow the cautions and warnings on the appliances themselves.

1.4.3 Operator's obligations

- Responsibility for and guarantee of the permanent correct operation of all safety-related components lie with the responsible manager. The correct operation of safety-related components *(→see 1.4.7)* must be tested at least once each calendar year by Electrolux Professional authorised specialist engineers and replaced if necessary.
- The user of the appliance is responsible for making sure the national guidelines on safe use are fully complied with.
- If the safety valve blows off on the pot, call the customer service immediately to establish and remove the cause.

1.4.4 Intended use

- The boiling pan is intended for use only for the preparation and processing of food in commercial kitchens such as restaurants, hospitals, staff canteens, butcher shops and food production companies.
  Any other form of use is in contravention of its purpose and can therefore represent a risk to people, animals or objects.
- The appliance must only be inspected and operated by technically trained people.
- The maximum level must not exceed the maximum level mark.
  The quantity selected must be lower with pressure cooking, with mixing mode and depending on the type of food to be cooked in order to prevent foaming over. Improper use *(e.g. exceeding the maximum fill mark)* may cause scalding as a result of hot food spilling and/or flowing over the edge of the pot.
- Operating staff must not actuate the safety valve *(including raising or turning the cap)*, otherwise hot steam could pour out and could lead to injuries and breakdown.
- The stirrer must not be used for fragmenting, splitting or chopping solid food such as ice, bones or fruit stones to avoid damaging the stirrer.
  Splinters flying out also put personal safety at considerable risk.
- Heating solid food that does not conduct heat well can cause it to burn onto the bottom.
  Caution: Risk of fire!
- Do not place any objects on the lid during use.
- Sealed containers *(such as preserves, tins, cans, bottles, tubes etc.)* must not be heated as there is the risk of them bursting and causing injury.
- The use of hazardous substances, such as highly concentrated vinegar essence, citric acid, limescale cleaners or flammable substances, on our cookers is strictly forbidden.
- Overheated oil can self-ignite. Never put water on burning oil but put out the flames with a lid or a damp cloth.
- The boiling pan must not be used for drying tea towels and other textiles.
- The boiling pan must not be used in the open air and in an uncovered outside area.

1.4.5 Safety

- The appliance is only to be used for cooking food in commercial operations.
- Closed containers *(cans, tins, canisters, bottles, tubes etc.*) must not be heated up with the appliance because they will explode and may thus cause injuries.
- When closing the lid there is the risk of injury if the person operating the appliance is not sufficiently far away from the lid closing area *(you could crush your fingers and hand or hit your head).*
- When you open the lid be aware of hot steam coming out of the pot. The appliance operator must take this into account and take appropriate measures *(stand at a distance, protect arms)* in order to prevent injuries.
- Important! Danger of trapping hands between tilting pots and fixed appliance parts.
- There is a high risk of scalding when emptying the boiling pan.
- The safety valve represents the final safety mechanism for the boiling pan. It must be able to prevent an impermissible excess pressure in the boiling pan's dual casing even when all other upstream regulating devices, control devices and monitoring devices fail.
- Important: Performing repairs on safety valves is not permitted. If it is faulty or leaks the whole safety valve must be replaced by an authorised specialist.
- If the temperature control is not functioning 100%, switch the appliance off immediately. Remove the appliance's main fuse. **Do not use the appliance if damaged in any way. Contact customer services.**
- When pouring oil, fat, water or stock into the preheated boiling pan it may spray out. This action must therefore be carried out by the appliance operator with due care.
- Overheated fats and oils can ignite quickly in the hot boiling pan! Always take care when cooking with fats and oils.

- The use of corrosive, poisonous and inflammable substances in our cooking appliances is strictly forbidden.
- Practise particular caution if the food is bubbling. If the lid is opened with a slight residual excess pressure, hot food may pour out and injure the operating staff.
- Pay particular attention to simmer-delay. Simmer delay is the name of the phenomenon that under certain conditions *(e.g. on high mountains or plateaux where the air pressure is lower that at sea level)* liquids can boil at lower than 100°C and therefore can be heated beyond their boiling point without them simmering, boiling or bubbling. This situation is dangerous because the slightest movement can quickly cause a large steam of gas bubble to form that can then explode out of the cooking pot.
- Our appliances are partially thermally insulated and insulated. The temperatures required for the cooking processes in industrial cooking appliances, depending on the function principle, mean that various parts *(e.g. cover areas, cladding panels etc.)* can get hot. This is not a design fault but caused by the physical phenomenon that stainless steel conducts heat.
- Do not spray the appliance with water, steam or high pressure cleaners and do not pour water over it.
- This appliance is not intended to be used by children and people with restricted physical, sensory and mental faculties or who have a lack of experience and/or knowledge unless they are supervised by a person responsible for their safety or have received instructions from this person on how the appliance is to be used.

1.4.6 Handling industrial cooking appliances

The built-in stainless steel components for industrial cooking are made of high-quality and approved materials.
The sum of their positive characteristics makes them ideal materials for use in food preparation.
The reason the anti-rust stainless steel can resist corrosion is a passive layer which builds up when oxygen hits the metal surface. There is sufficient oxygen in the air to do this.
If this passive layer is damaged by mechanical effects or damaged chemically and the passive layer is prevented from regenerating itself *(lack of oxygen)* even rust-free stainless steel may corrode. It is possible to develop or regenerate the passivity by treating it with running oxygen-rich water. Degenerative *(oxygen starving)* abrasives, such as substances containing hydrochloric acid, chlorides and spice concentrates, mustard, vinegar essences, spice cubes and cooking salt solutions can cause chemical damage or destruction of the passive layer depending on the concentration and the temperature. In addition damage may occur due to external rust *(small iron parts)* by the formation of galvanised elements and by lack of oxygen *(no ventilation or low-oxygen water)*.

Note, therefore, the following principles when working with stainless steel appliances:

- Keep stainless steel surfaces clean at all times and make sure they are well ventilated. Do not place the lid on appliances when not in use so that air can get to the surface. Regularly wipe away any build-up of lime scale, grease, flour and egg white. A layer of any of these substances can encourage corrosion by starving the surface of air. Descaling can be carried out with a solution of 10% vinegar, 10% phosphoric acid or a suitable commercially available descaling agent.
- Do not let stainless steel parts come into prolonged contact with acids, spices, salts, etc. Even acid fumes which build up from cleaning tiled surfaces can promote corrosion. Rinse off work surfaces with fresh water. This applies especially after cooking potatoes, pasta or rice in salted water. Dried-up cooking water creates a highly concentrated salt solution which can quickly cause corrosion.
  For this reason, rinse cookware immediately after use with fresh water or fill with cold water and leave to cool down. It is uneconomical to use an appliance solely for the purpose of, for example, boiling potatoes in salted water. Instead, with stainless steel it is sensible to fill the appliance with various types of food, e.g. with soups with a high fat content or acidic vegetables *(such as pickled cabbage)*.
- Avoid physical damage to the stainless steel surface, especially with other metals. If stainless steel comes into contact with iron *(wire wool, swarf from cables, iron-rich water)* this can lead to corrosion.
  Remove fresh rust with a mild scouring agent or fine abrasive paper. Wash away stubborn rust with a warm 2-5% oxalic acid solution.
  If these cleaning agents do not work, treat the rust with 10% nitric acid. Because of the risk involved, this treatment may only be applied by technically trained staff in accordance with the applicable guidelines.
- Information on cleaning the appliance (→*see 1.6.3 Cleaning the appliance)*

4.7 Customer services, service, repair and maintenance work

- **Service, repair and maintenance work must only be carried out by Electrolux Professional or Electrolux partner dealers.** Country-specific and local regulations apply. This applies in particular to safety and regulatory installations. We recommend entering into a service contract.
- Prior to commencing any servicing, repair and maintenance work the appliances must be disconnected from the mains supply *(switch off the main switch or remove the fuses in the power supply)* and the steam, condensation and drinking water pipes must be closed off.
- Parts to be replaced must be replaced by original Electrolux parts.
- The warning and information notices fitted to the appliances must be obeyed by specialist and customer service staff and must not be removed or altered.
- Responsibility for and guarantee of constant operating ability for all safety-related components *(safety valve, dual casing, drain tap, safety thermostats, stirrer lid switch etc.)* lie with the responsible manager.
  Their functional ability must be tested at least once each calendar year by authorised specialists and restored as necessary.
- When operating the cooking appliance for maintenance work you must ensure that there are no moving parts, such as fans, inside the appliance. *(There is a high risk of injury).* Take extreme care.
- The appliance must be blocked via external valves prior to performing maintenance work on pressure parts.
- Repairs and service on the appliances must be carried out when heating elements have cooled down.
- Do not use any inflammable liquids to clean the appliance.
- In the event of a persistent defect that prevents operation, switch off the appliance and disconnect it from the mains.
- The internal electrical wiring in the appliance and the connections to the earth cable are in accordance with the respective wiring diagrams and must not be modified. All metal parts which have electrical connections on them must remain earthed.
- Similarly constructed cooking appliances are not under obligation to be certified. They are subjected to pressure and function tests at the factory in accordance with the relevant guidelines. A repeated pressure test is not absolutely necessary.
- In the interest of the appliances' full functional capacity and safety, the operator should periodically arrange for an inspection of all safety devices and a function test for the safety valve.
- The inspection interval for checking that the safety valve can move freely must be individually determined and ensured by the operator depending on the intensity of use and the operating hours for the boiling pan, however it must take place at least once each calendar year.

1.4.8 Maintenance periods

- Depending on the frequency and intensity of use functional parts must be maintained and tested consistently at regular intervals. However this must be at least once a calendar year.
- Electrolux Professional recommends the conclusion of a maintenance agreement.

1.5 ENVIRONMENTAL PROTECTION

1.5.1 Packaging

- All packaging materials used are environmentally-friendly. They may be stored without risk, taken to a recycling centre or incinerated in special waste incineration plants.

1.5.2 Disposal

- The WEEE symbol on the appliance means that this appliance must not be disposed of with the normal household waste but must be disposed of in accordance with the conditions in force so that no danger to the environment or the health of people can occur.
- Should you require further information on disposing of this appliance, please contact a sales or customer service representative, the retailer of this product, or your local waste disposal service.

1.6 CLEANING

1.6.1 Suitable cleaning products

- For environmental protection reasons it is recommended that the appliance is cleaned only with products which are more than 90% biologically degradable.
- The appliances must be cleaned with commercially available, food compatible cleaning agents.
- No bleaching, chlorine-based, highly flammable, granular or abrasive cleaning agents must be used to clean the appliance.

1.6.2 Cleaning instructions

- Before cleaning the appliance must first of all be disconnected from the power supply and cooled down completely to avoid the risk of scalding or electric shock.
- The cooking appliance must be cleaned after each cooking procedure. If the cooking appliance has a drainage tap to discharge the food, this must be cleaned and the grease removed by kitchen staff every day depending on the frequency of use after the last use of the cooking appliance.

1.6.3 Cleaning the appliance

- General: Only non-toxic cleaning agents should be used for cleaning. After cleaning the cooking appliances must be thoroughly rinsed with water and rubbed dry. The surfaces of our cooking appliances are made of rust-resistant chromium nickel steel.
  They must be washed with a hot mild cleaning agent and rubbed dry.
  They must not be cleaned with wire brushes, wire wool, copper cloths, sand-based products or similar because using such agents damages the surfaces and creates conditions for corrosion attacks.
  Spraying the appliances or parts thereof with a high-pressure cleaning hose is harmful and can lead to functional damage.
  This must therefore be prohibited.
- Boiling pans and pans: Wash pans with a mild cleaning agent and a brush. Then rinse with hot water and rub dry with a towel or absorbent paper. To prevent the risk of corrosion, do not allow salted water or food to dry onto the pot. Do not spray the appliance with a high-pressure cleaner.
  Clean the floor directly in front of, next to and behind the appliance in the usual way, i.e. not using a high-pressure cleaner.
- Outer casing: Wash the outer casing of the appliance with a mild cleaning agent, rub dry and polish with metal polish if necessary. Do not use wire brushes, copper cloths, wire wool or similar products.
- Drain tap: Dismantle the drain tap unit, clean with a mild cleaning agent, dry and grease lightly with a special odourless, tasteless, food-safe tap and fittings grease. We recommend:
  Special grease for taps and fittings (for tap with seal/ O ring) = Order number: 0G5343
  Lubricant for taps with metal seals (for taps without seal/O-ring) = Order number: 0G5344.
- Optional accessories (such as stirrer etc.): These loose parts must be cleaned separately from the cooking appliance.

1.7 TRANSPORT, HANDLING AND STORAGE

1.7.1 Introduction

Appliances must be transported (i.e. moved from one place to another) and handled (i.e. moved within the company premises) using lifting devices with a suitable load-bearing capacity. The appliance can be transported by truck, train, ship or aircraft. Apart from road transport the appliance is sent in a container together with other appliances.
The appliances can be loaded inside the container either by the manufacturer or the assigned carrier. Due to the appliance dimensions it is not permitted to stack the appliances on top of each other during transport. In such cases the manufacturer will not be liable should the load tip over. The manufacturer shall under no circumstances be liable for damage to the packaging or the appliances. The transport, handling and storage of the appliances must be carried out only by specialist workers who:

- possess specific technical training and experience;
- know the safety regulations and the legal provisions of their specialist area;
- possess knowledge about general safety provisions;
- are able to recognise and avoid possible dangers.

The staff that is responsible for the transport, handling and storage of the appliances must be trained in the use of hoisting aids and possess sufficient knowledge for the use of individual means of protection for the work to be carried out (e.g. work wear, safety shoes, safety gloves and hard hats).

1.7.2 Unloading

Prior to removing the transport fastenings you must ensure that the stability of the appliance components does not depend on the fastenings and that the load cannot fall from the vehicle as a result.
Standing under hanging loads during loading and unloading is prohibited. Unauthorised persons are prohibited from accessing the work area. Prepare a suitable location with an even floor for the unloading and storage of the appliances.

1.7.3 Handling instructions

To ensure that that appliances are lifted safely, the following precautions must be observed:

Use equipment with suitable characteristics and sufficient load bearing capacity (e.g.: forklift or electric pallet truck);

- cover sharp edges;
- check the forks and observe the instructions on the packaging during lifting.

Prior to lifting:

- Ensure that all workers remain at a safe distance and prevent unauthorised people from entering the work area;
- Check the stability of the load;
- Ensure that no material can fall during vertical movements and avoid bumps;
- Lift the appliances as little as possible when shifting them.

1.7.4 Moving the appliance and setting down the load

The driver of the hoisting aid must:

- have a good overview of the distance to be travelled;
- be able to stop driving in dangerous situations.

Prior to setting down the load you must ensure that the thoroughfare is free and the floor is even and that a device with sufficient load bearing capacity is available.

1.7.5 Storage

The appliances and/or their parts must be protected from moisture and stored in a dry, vibration-free room with a non-aggressive atmosphere and a temperature of 5°C / 41°F to 50°C / 122°F. The storage area must have a horizontal, level contact surface in order to prevent the appliances becoming misshapen or the support feet being damaged.
The appliances may only be installed, assembled and disassembled by specialist workers. The accessories delivered with the appliances must not be changed. Any parts that have been lost or are faulty must be replaced with original parts.

2. APPLIANCE FUNCTIONS AND EQUIPMENT

2.1 OVERVIEW

A Lid
B Panel
C Controls of the TOUCH control unit
D USB connection
E Main switch *(accessory)*
F Boiling pan
G Tilt function handle
H Emergency stop switch *(only with stirrer)*

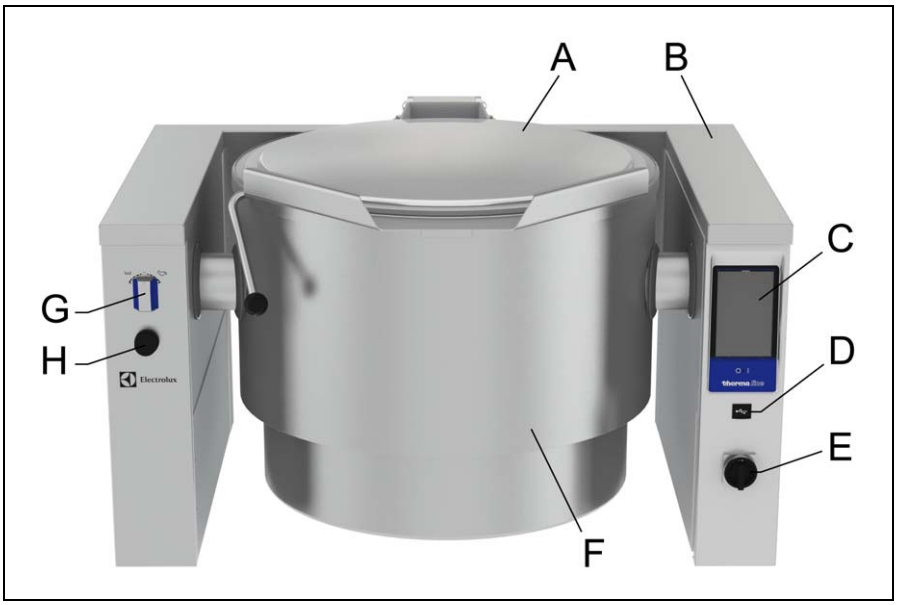

2.2 APPLIANCE FUNCTION

The tilting boiling pan is used for boiling, sauteing, poaching and steaming all types of food.
The food in the tilting boiling pan is heated by saturated steam in the dual casing.
Liquid and food are heated particularly gently by indirect heat through the pan base and the side walls. The boiling pan dual casing has an automatic ventilation system and a safety thermostat which prevents the water level in the dual casing from dropping too low.
A high quality, tested safety valve also prevents excess steam pressure in the dual casing.
The tilting boiling pans are fitted with an electronic control system. The electrical control unit is operated by a user-friendly, self-explanatory tough screen display user interface. The main functions include:

- Programmable cooking processes.
- Loading and storing all parameters for individual and multi-phase cooking processes on a USB disc.
- Large, clear simultaneous display of actual and target values.
- Real time clock.
- Programmable timer for individual and user-specific cooking start.
- A generous selection of nine power levels will help your individual cooking requirements, methods and techniques.
- Soft cooking for gentle heating of sensitive foodstuffs and cooking ingredients.
- Precise adjustment of the water supply *(with automatic water filling accessory).*
- Selection of three stirrer function levels (standard).
- Setting the precise number of revolutions per minute for the stirrer (variable).
- Capturing, recording and evaluating cooking data *(locally and transferred via USB port).*

For further information and a detailed description of all common cooking functions *(→see Chapter 8 OPERATING THE TOUCH CONTROL).*

2.3 DESIGN AND STRUCTURE

The outer and inner structure of the whole cooking appliance is made of stainless steel (AISI 304).
The inner pan that comes into contact with the food is made of high quality, rust-free stainless steel (AISI 316L).
The surface of the boiling pan is highly polished, ensuring an excellent level of hygiene, universal versatility and making it easy to clean while preventing any mixing of flavours. The lid is balanced. The pan can be tilted 90° thus ensuring that the food can be removed easily. The tilting boiling pan is tipped at variable speed using an electric motor.
Optional *(only if ordered with the appliance. Cannot be retrofitted).* It is also possible to fit the tilting boiling pan with a food drain tap which is used to provide the specific dose of the food to be discharged or to pump it out using automatic filling systems or to fill containers.

2.3.1 Brief description of the most important working parts

The electronic TOUCH control is used to operate the boiling pan.

Safety thermostat is used to protect the electrical heater from overheating in the event of insufficient water in the dual casing.

Food sensor is used to check the precise temperature of the required cooking processes.

Dual casing sensor controls the temperature or the operating pressure of the steam in the dual casing and the relevant heat supply required.

Electrical heaters heat up the water in the dual casing.
Each individual heating element is protected by an inbuilt safety fuse to prevent overheating.

Ventilation system purges the dual casing during the heating phase and ventilates the dual casing after the cooling phase.

Safety valve prevents impermissible excess pressure *(>1.7 bars)* in the dual casing and requires regular maintenance by Customer Services *(→see Service Manual).*

Electric tilting is used to empty the tilting boiling pan.

Micro switch is used to switch the heat off when the pan is tilted.

Lid is used to reduce energy losses and to reduce heating times in the closed position.

2.4 EXTENSION OPTIONS

Cooking appliances which have a stirrer device can also be fitted with various stirrers, such as:

- universal stirrer
- grille stirrer with or without spatula
- paddle stirrer
- purpose made special stirrer, such as cream or potato stirrer on request.

Optional extras can be added to all the tilting boiling pans listed below.
Caution: Individual accessory items (*) cannot be retrofitted and must be ordered with the appliance because they are integrated into standard appliances at the factory. Please contact the factory first of all to ensure that they are available and that extension is possible.

Below there is a round up of optional extras:

- Mixer tap*
- Automatic water filling device *(Cold water/ hot and cold water)**
- Spray gun*
- Drain tap for discharging food*
- Energy optimisation EO / Potential free contact PC
- Measuring stick
- Overall panel cover to connect the panels of two cooking appliances*
- Back panel (C board)* and other accessories can be added on request.

2.5 TESTS/ CERTIFICATES

All appliances are VDE/TÜV tested. They meet the following standards and directives:

- DIN EN 60335-1
- EN 60335-2-47
- EN 62233
- EC Machinery Directive 2006/42/EC
- Pressure Equipment Directive 97/23/CE, AD2000 regulations
- ISO 12100:2011-03, ISO 12100:2010
- ISO 9001:2008, ISO 14001:2004

The appliances are marked with the CE symbol on the identification plate. All appliances are tested and approved for water protection class IP X6 . Obtaining the full functionality of the water protection class requires the full functional efficiency of all seals and the correct assembly of all components following installation, repair and service work. The appliance's noise level is low to the point of negligible. Legal regulations are met. The sound pressure level is lower than 70dB (A).

3. SPECIFICATIONS

3.1 VALIDITY AND IDENTIFICATION

This document deals with the following appliance model types in the Pro Thermetic tilting boiling pan product range with the following names *(can be found on the identification plate, →for this see Section 1 "General information*"):

Electrically heated	PBOT06E	PBOT10E	PBOT15E	PBOT20E	PBOT30E	PBOT40E	PBOT50E
With stirrer	PBOT06R	PBOT10R	PBOT15R	PBOT20R	PBOT30R	PBOT40R	PBOT50R
Cook & Chill tba	*- - -*	*PBOT10Z*	*PBOT15Z*	*PBOT20Z*	*PBOT30Z*	*- - -*	*- - -*
With variable stirrer tba	*PBOT06W*	*PBOT10W*	*PBOT15W*	*PBOT10W*	*PBOT10W*	*PBOT40W*	*PBOT50W*

3.2 APPLIANCE MODEL CODING

P = Pro Thermetic product range, B = Boiling pan / Kochkessel, O = round / rund, T = Tilting / Kippbar,
06-50 = capacity in litres *(x10)*, E = Electric / Elektrisch, R = Electric with standard stirrer.
Z= Cook & Chill, W = Electric with variable stirrer.

3.3 TECHNICAL DOCUMENTATION

Operating and installation instructions	87.8020.01 supplied with appliance
Spare parts catalogue	87.8020.02 in the customer services centre
Service manual (contains the parameter lists)	87.8020.03 in the customer service centre
Parameter programming	87.8005.01 in the customer services centre
Electrical wiring diagram	Supplied with the appliance and published in the service manual

3.4 TYPE OF INSTALLATION

The tilting boiling pans are optionally available as:

- freestanding as an island, on feet, chromium steel or concrete base
- freestanding against the wall, on feet, chromium steel or concrete base
- wall-mounted.

3.5 STANDARD APPLIANCES

Appliance		Width	Depth	Height	Base feet	Electr. output	Net weight	Pot size	Voltage	Fre-quency	Amperage
PNC	**Type**		**mm**			**kW**	**kg**	**lt.**	**V**	**Hz**	**A**
586000	PBOT06EAEx	1100	800	700	200	12.2	170	60	400V/ 3N	50/60	17.3
586001	PBOT06EEEx			800	100						
586002	PBOT06ETEx			400	- -						
586003	PBOT06ECEx		900	700	200						
586004	PBOT06EGEx			800	100						
586005	PBOT06EVEx			400	- -						
586122	PBOT06EBEx		850	700	200						
586123	PBOT06EUEx			400	- -						
586006	PBOT10ECEx	1200	900	700	200	18.2	180	100			26
586007	PBOT10EGEx			800	100						
586008	PBOT10EVEx			400	- -						
586009	PBOT15ECEx	1300		700	200	24.2	260	150			34.7
586010	PBOT15EGEx			800	100						
586011	PBOT15EVEx			400	- -						
586012	PBOT20EDEx	1400	1000	700	200	30.2	360	200			43.4
586013	PBOT20EHEx			800	100						
586014	PBOT20EWEx			400	- -						
586015	PBOT30EDEx	1500		700	200	36.2	390	300			52
586016	PBOT30EHEx			800	100						
586017	PBOT30EWEx			400	- -						
586018	PBOT40EDEx			700	200	48.2	450	400			69.9
586019	PBOT40EHEx			800	100						
586020	PBOT50EDEx			700	200		520	500			
586021	PBOT50EHEx			800	100						

3.6 APPLIANCES WITH STIRRER

Appliance		Width	Depth	Height	Base feet	Electr. output	Net weight	Pot size	Voltage	Fre-quency	Amperage
PNC	Type		mm			kW	kg	lt.	V	Hz	A
586022	PBOT06RCEx	1100	900	700	200	12.5	200	60	400V/ 3N	50/60	17.8
586023	PBOT06RGEx			800	100						
586024	PBOT06RVEx			400	- -						
586025	PBOT10RCEx	1200		700	200	18.6	210	100			26.6
586026	PBOT10RGEx			800	100						
586027	PBOT10RVEx			400	- -						
586028	PBOT15RCEx	1300		700	200	24.6	290	150			35.3
586029	PBOT15RGEx			800	100						
586030	PBOT15RVEx			400	- -						
586031	PBOT20RDEx	1400	1000	700	200	30.6	400	200			44
586032	PBOT20RHEx			800	100						
586033	PBOT20RWEx			400	- -						
586034	PBOT30RDEx	1500		700	200	36.6	430	300			52.8
586035	PBOT30RHEx			800	100						
586036	PBOT30RWEx			400	- -						
586037	PBOT40RDEx			700	200	48.6	490	400			70.1
586038	PBOT40RHEx			800	100						
586039	PBOT50RDEx			700	200		560	500			
586040	PBOT50RHEx			800	100						

3.7 TECHNICAL DETAILS

3.7.1 Sub-systems

	PBOT06E	PBOT10E	PBOT15E	PBOT20E	PBOT30E	PBOT40E	PBOT50E
Dual casing:							
Capacity in dm^3 / litres	8.6	11.5	15.2	22.2	29.1	35.9	43.1
Max. operating pressure	1.5 bar						
Max. permissible pressure PS	1.7 bar						

General appliance information:							
Water protection:	IP X6						
Inner pan dimensions: Diameter / depth	ø579/385	ø640/395	ø710/465	ø800/490	ø900/570	ø900/720	ø900/880
Working temperature	25-110						

Stirrer:		
Speed rpm: Stirrer	25	21

3.7.2 Performance data: Water heating times (as per DIN18855-1: 2005 (-07)

	PBOT06E	PBOT10E	PBOT15E	PBOT20E	PBOT30E	PBOT40E	PBOT50E
Water heating times							
Water volumes in litres	60	100	150	200	300	400	500
Heating from	20-90°						
Required heating time in minutes	27.5	29.8	34	36	44.9	46	tba
Energy consumption in kW	5.58	8.97	tba	tba	26.84	tba	tba
Efficiency as a %	87.54	90.76	tba	tba	91	tba	tba

4. INSTALLATION & ASSEMBLY

4.1 DIMENSION DRAWINGS FOR FLOOR AND WALL INSTALLATION

4.1.1 Floor and wall mounted appliances

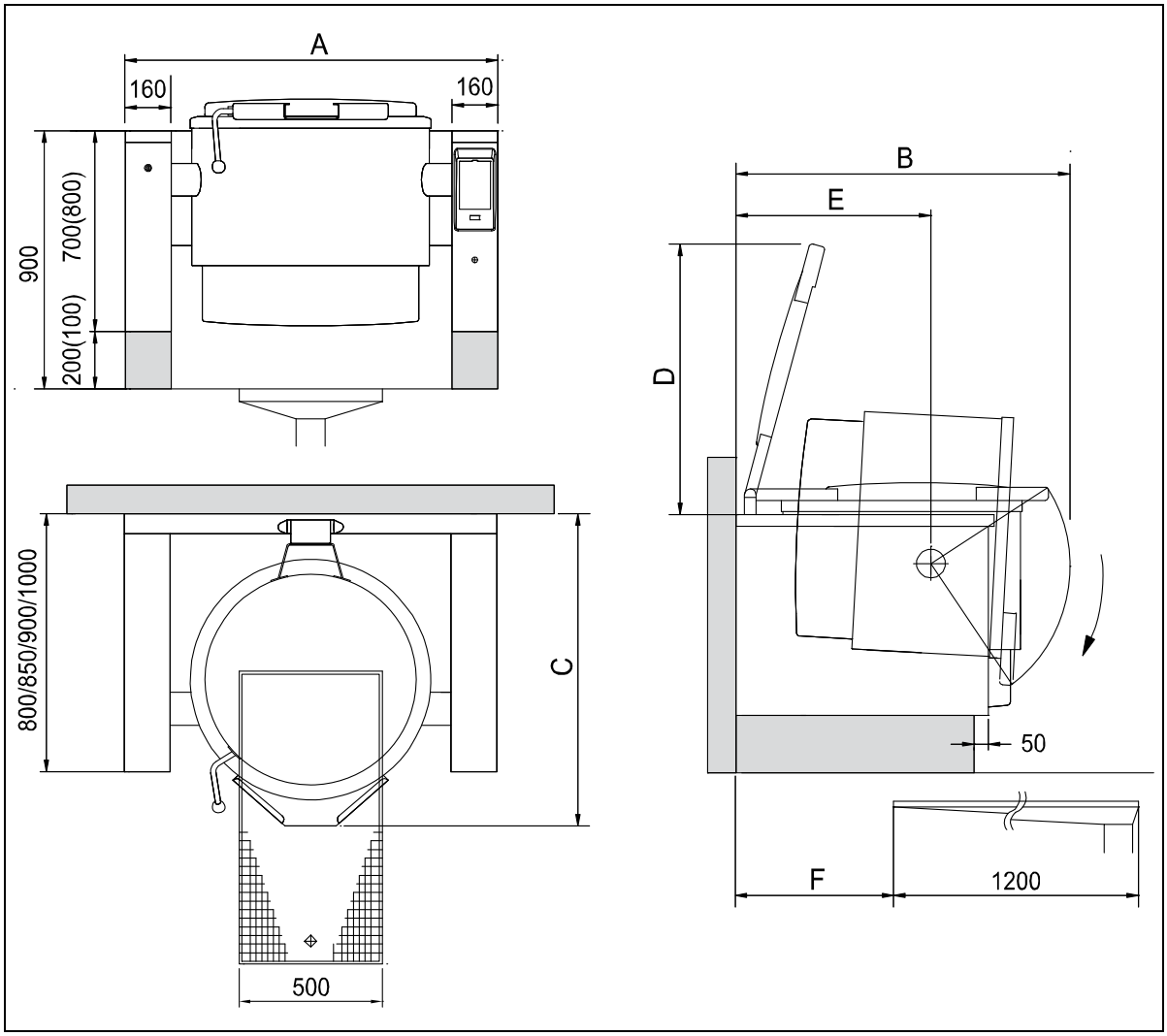

PBOT	60lt.			100lt.	150lt.	200lt.	300lt.	400lt.	500lt
Depth	***800***	***850***	***900***	***900***	***900***	***1000***	***1000***	***1000***	***1000***
A	1100	1100	1100	1200	1300	1400	1500	1500	1500
B	980	980	1073	1124	1165	1335	1360	1447	1564
C	908	908	1008	1060	1090	1234	1278	1278	1278
D	758	758	856	856	945	1147	1169	1314	1474
E	580	580	680	680	680	780	780	780	780
F	550	550	550	550	550	700	700	700	700

4.1.2 Wall mounted appliances

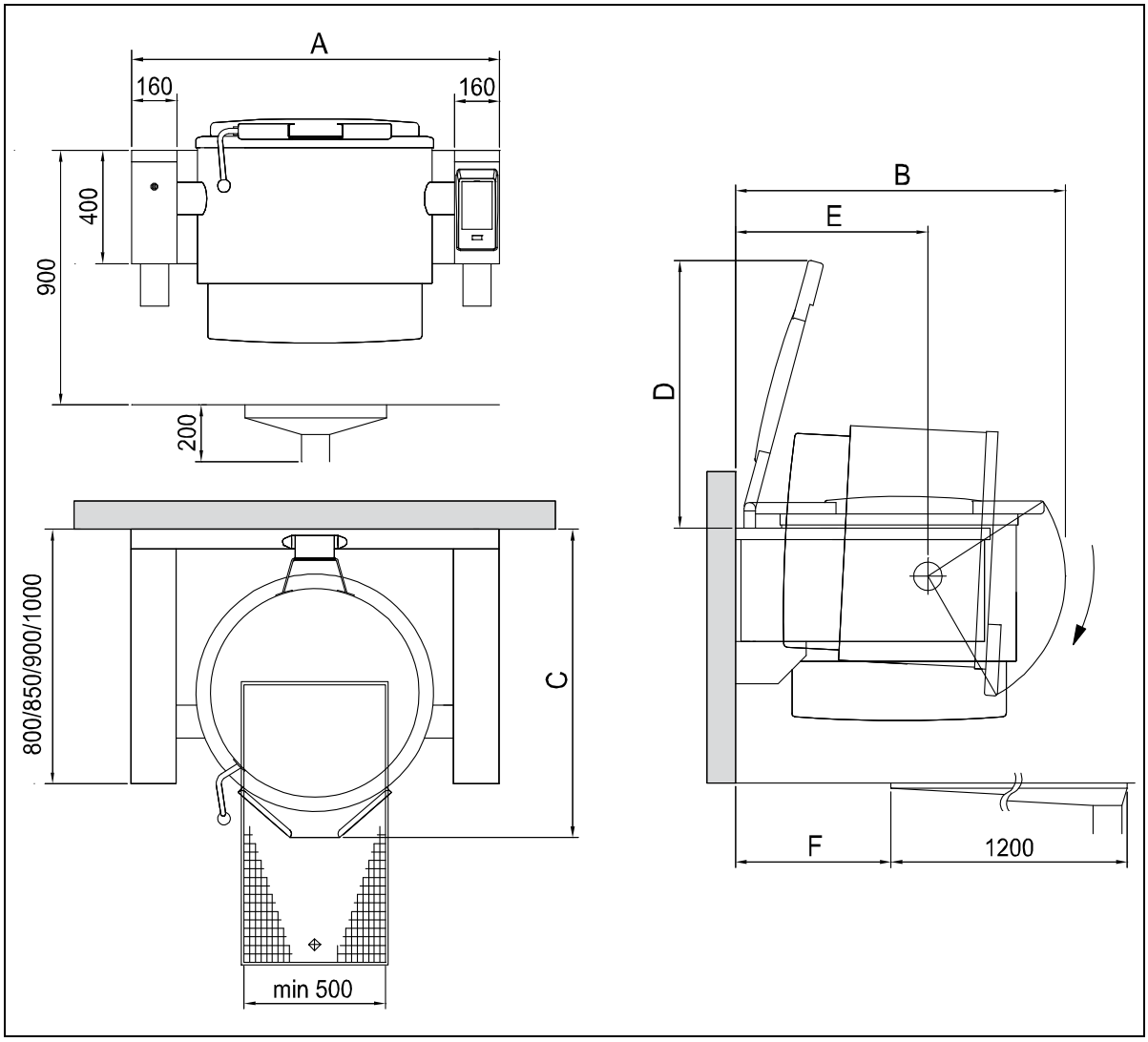

PBOT	60lt.			100lt.	150lt.	200lt.	300lt.
Depth	***800***	***850***	***900***	***900***	***900***	***1000***	***1000***
A	1100	1100	1100	1200	1300	1400	1500
B	980	980	1073	1124	1165	1335	1360
C	908	908	1008	1060	1090	1234	1278
D	758	758	856	856	945	1147	1169
E	580	580	680	680	680	780	780
F	550	550	550	550	550	700	700

4.2 INSTALLATION DIAGRAMS AND CONNECTIONS

4.2.1 Appliances to be installed on the floor and against a wall

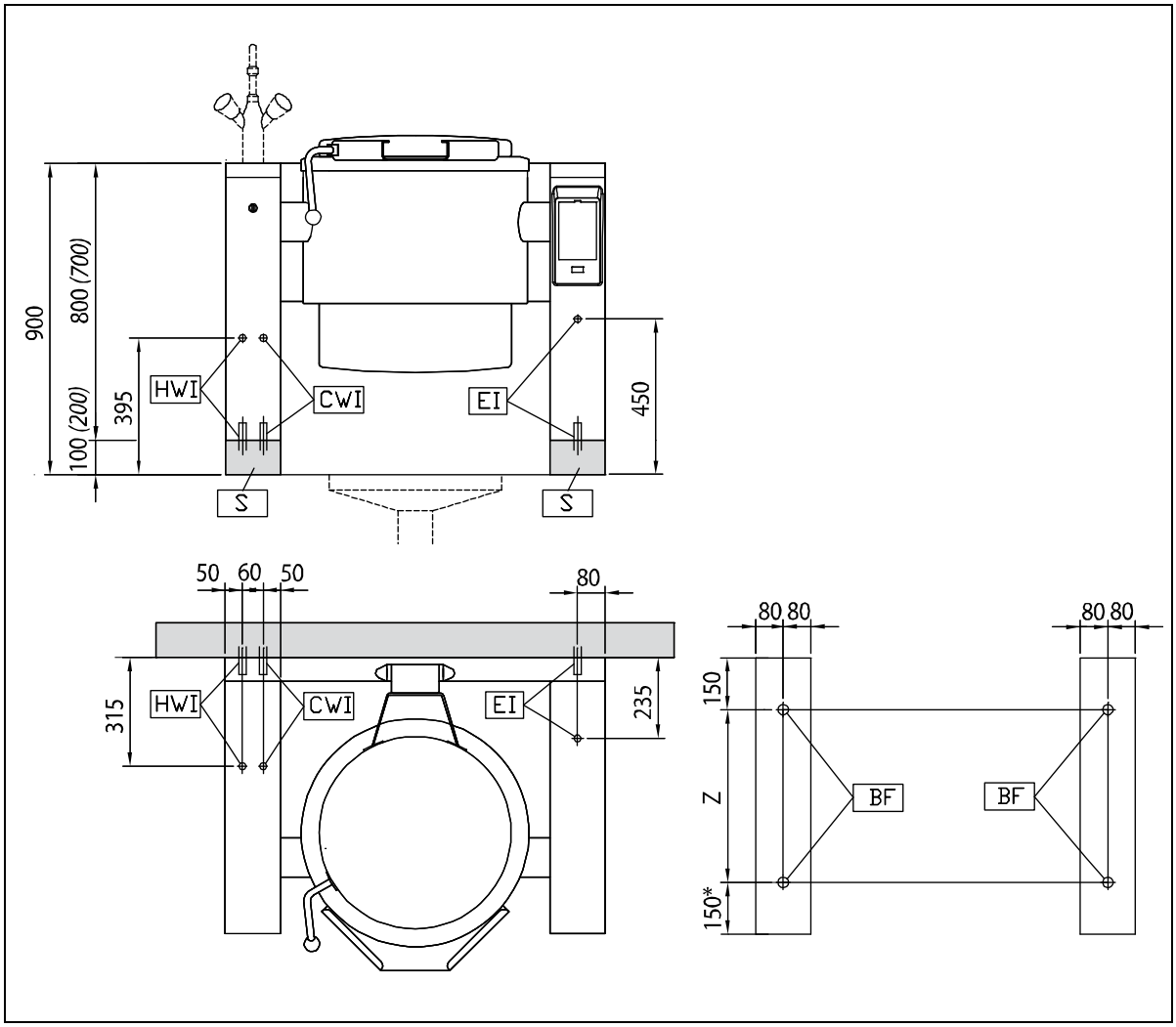

EI	**Electrical connection**
HWI	**Hot water connection** *(G 1/2", NW15)*
CWI	**Cold water connection** *(G 1/2", NW15)*
BF	**Floor attachment points**
S	**Steel or wall plinth - standard 100mm** *(for appliance height: 800mm)*
	Steel or wall plinth - hygienic 200mm *(for appliance height: 700mm)*
Z	**500mm** *(with a appliance depth of 800/850mm);* **600mm** *(for appliance depth of 900mm);* **700mm** *(for appliance depth of 1000mm*
*	**200mm** *(for appliance depth of 850mm)*

4.2.2 Wall mounted appliances

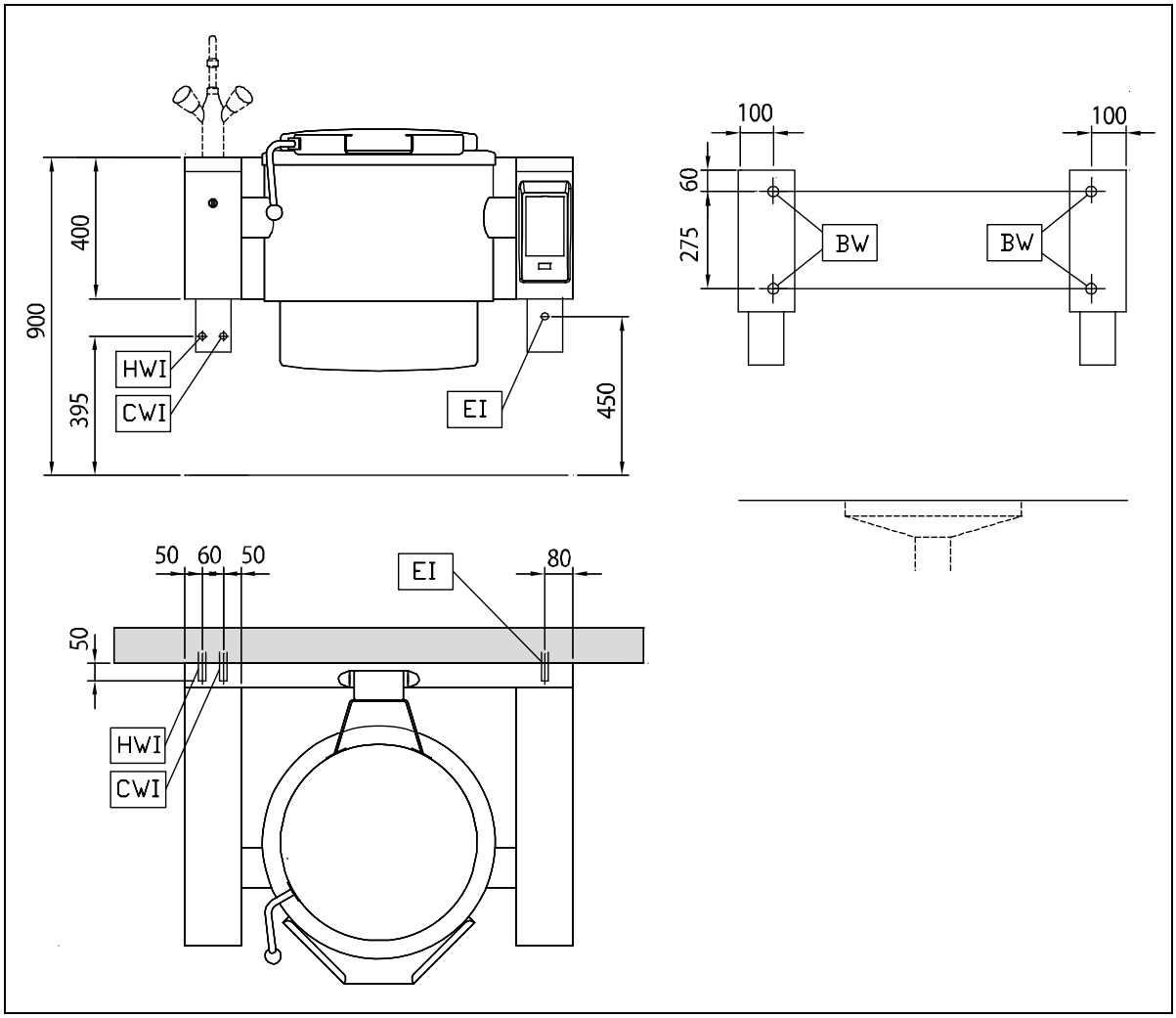

EI	**Electrical connection**
HWI	**Hot water connection** *(G 1/2", NW15)*
CWI	**Cold water connection** *(G 1/2", NW15)*
BW	**Wall attachment points**

4.3 FLOOR OUTLET AND GUTTERS

Tilting models are fitted with a loose grate and floor outlet in the base tray near the water outlet. These help drain away the water when the appliance is cleaned. The base trays can be designed for a single appliance or for a whole group of appliances. They vary greatly in shape and size. Please refer to the relevant installation diagram for positioning and use. The trays are usually cemented into the floor with an outlet.

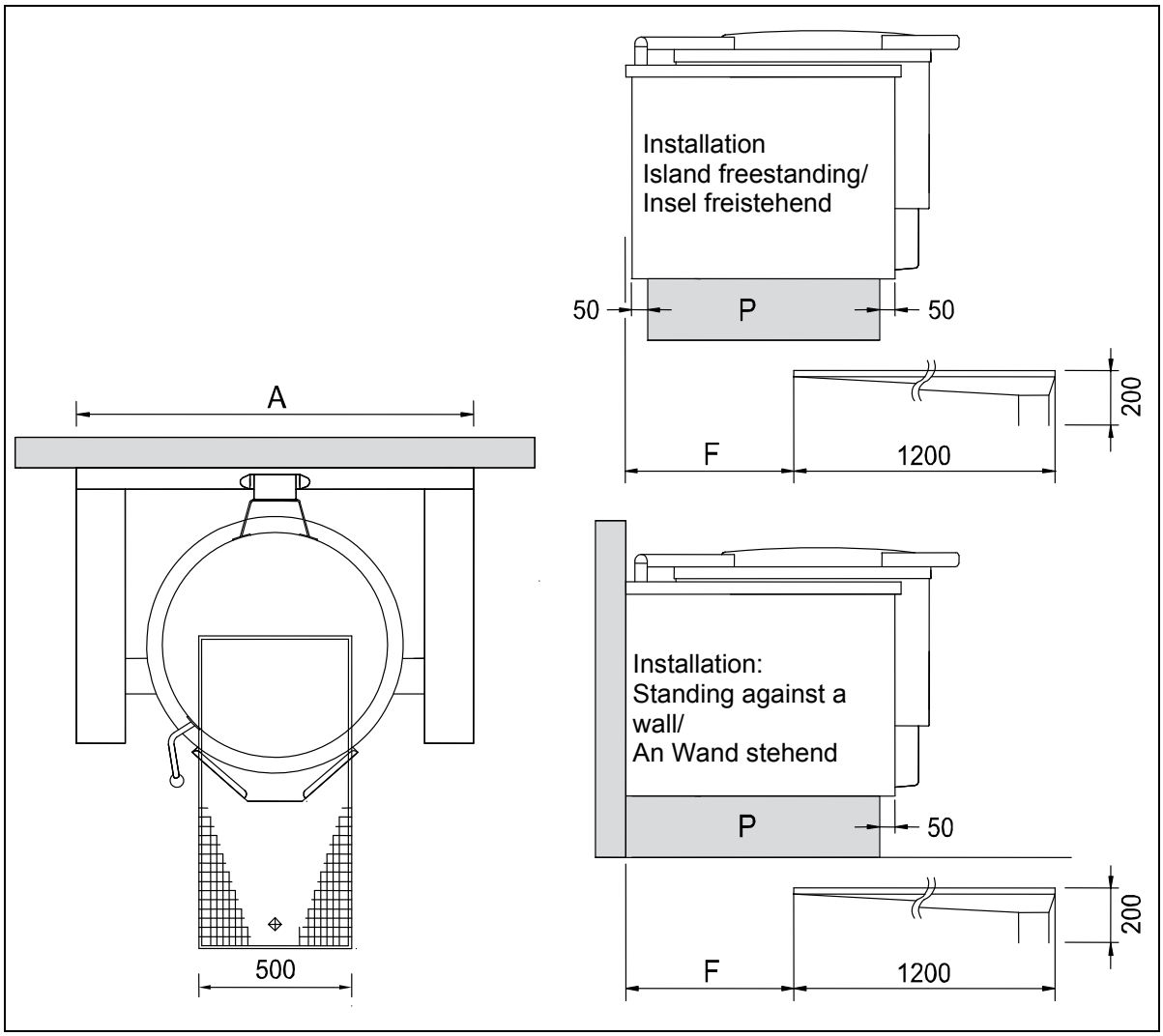

PBOT	60lt.			100lt.	150lt.	200lt.	300lt.	400lt.	500lt
Depth	***800***	***850***	***900***	***900***	***900***	***1000***	***1000***	***1000***	***1000***
A	1100	1100	1100	1200	1300	1400	1500	1500	1500
F	550	550	550	550	550	700	700	700	700

4.4 INSTALLING THE APPLIANCE

The appliance should always be installed in its intended location according to the relevant diagrams.
The appliance should be connected to fixed cables. Individual or groups of appliance can be fitted:
- freestanding as an island - standing against a wall, on feet, chromium steel or wall plinth (P) and
- wall-mounted on a wall or an installation wall.

Noise and vibration emissions: When installing the appliances, no additional measures are specified for the purpose of decreasing noise and vibration as the limit values are under-run by a significant amount.

4.5 ACCESS TO THE INSIDE OF THE APPLIANCE

4.5.1 Removing the panel front (F):

- Remove the screws (S1) on the bottom of the panel front (F).
- Pull on the underside to remove the control panel (F) and pull it downwards and out of the track.

4.5.2 Removing the panel cover (A/B):

- Remove each of the two M5 nuts (M1) *[located on the inside of the panel]* for each panel cover (A/B).
- Lift off the panel covers (A / B).

4.5.3 Removing the service cover (V):

- Remove the service covers (V) by removing the screws (S3).

4.5.4 Removing the side walls (S):

- First remove the control panels (F) and panel covers (A+B).
- Remove the side walls (S) by removing the four M4 nuts (M2) *[located inside the panel].*

4.5.5 Removing protective coverings (SA):

- The installation connection*s (e.g. for electricity and water)* are located under the protective coverings (SA) *(when wall-mounted)*.
- Remove the protective coverings (SA) by removing the screws (SS).

4.5.6 Refitting all covers

- This is done in reverse order to removing.

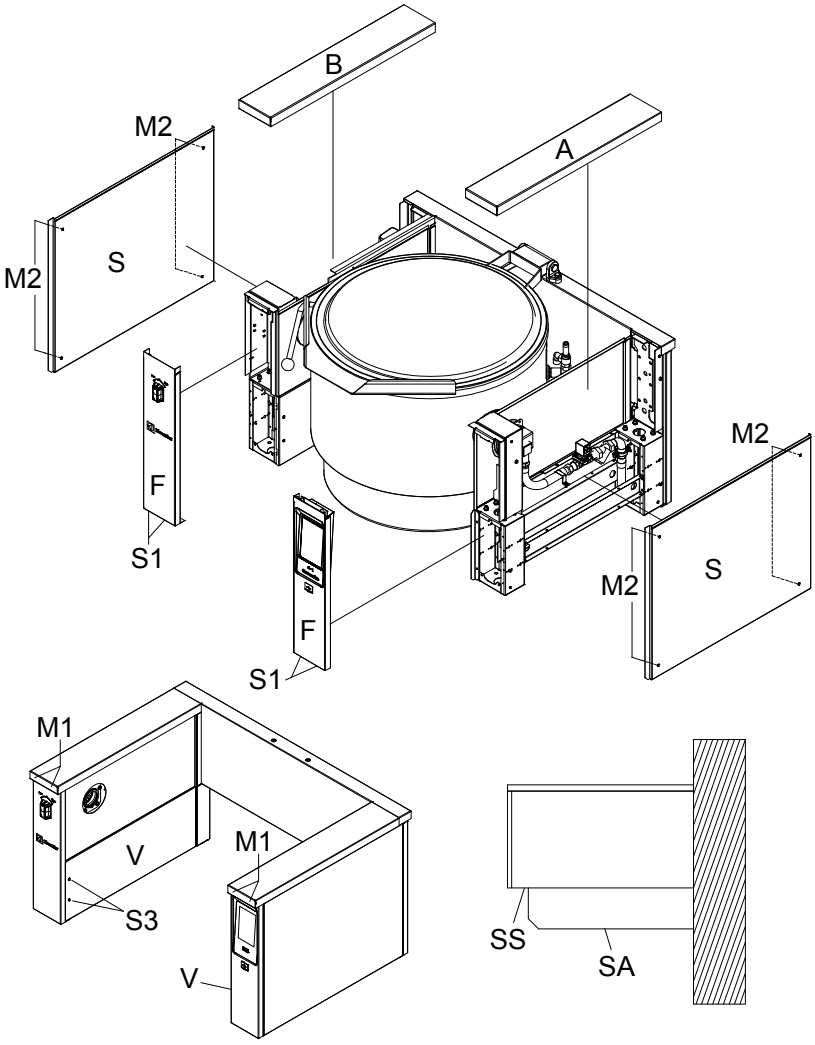

4.6 ASSEMBLY AND SET UP

4.6.1 Floor installation: free-standing or standing against a wall

Transport the appliance on its pallet directly in front of the desired point of installation. The installation connections that are sticking out of the floor should be as close as possible to the side of the transport pallet. Shift the appliance onto the transport pallet such that all of the installation connections lie within the appliance.

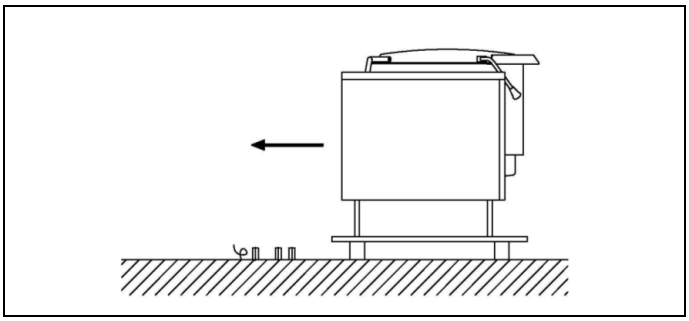

Carefully unload the appliance from the transport pallet.

Caution: Be aware that the appliances to be unloaded can have a considerable weight. You must ensure that the unloading and reloading is carried out using a suitable secured hoisting aid with sufficient load bearing capacity. *(→see CHAPTER 1.7 "TRANSPORT, HANDLING AND STORAGE").* Remove the transport pallet and dispose of it professionally together with the packaging material.

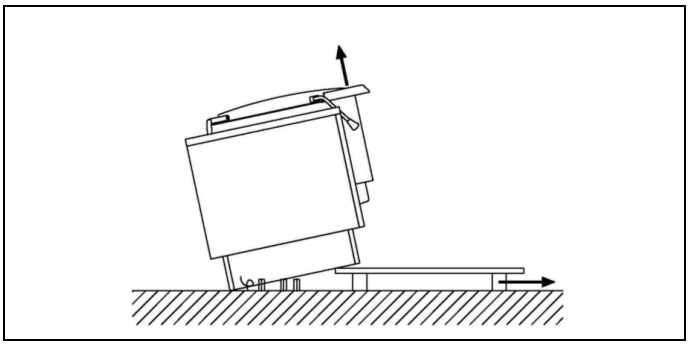

Set the appliance down carefully and move it to the desired position, align it horizontally and secure. Remove panel cover (A/B) and the service covers (S3). (*→see 4.5 "ACCESSING THE INSIDE AREA"* Electrical and water connections as per the description*:* *(→see 4.8 "ELECTRICAL CONNECTION")* *(→see 4.9 "MIXER TAP"*). When successful installation is complete, re-attach the panel covers (A/B) and the service covers (S3).

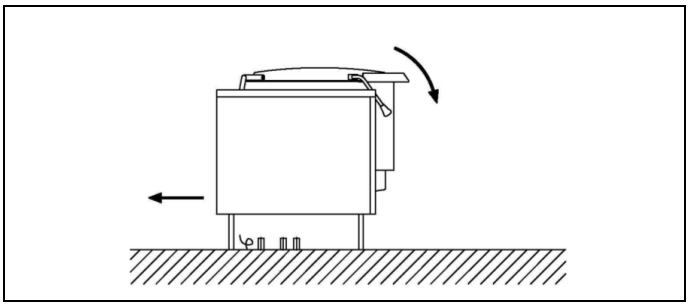

Fixing to the wall plinth
(→see also 4.2 "INSTALLATION PLANS AND CONNECTIONS"). Depending on the type of installation: freestanding as an island or standing against the wall we recommend a recess of 50mm *(→see 4.3 FLOOR OUTLET AND GUTTERS).*
Follow the installation diagrams to attach the dowel holes and dowels (4) before positioning the appliance. Use the screws to set the height of the appliance (1).
Fix the appliance in place by lowering the tension of the appliance with washers (8) under the screws (6).

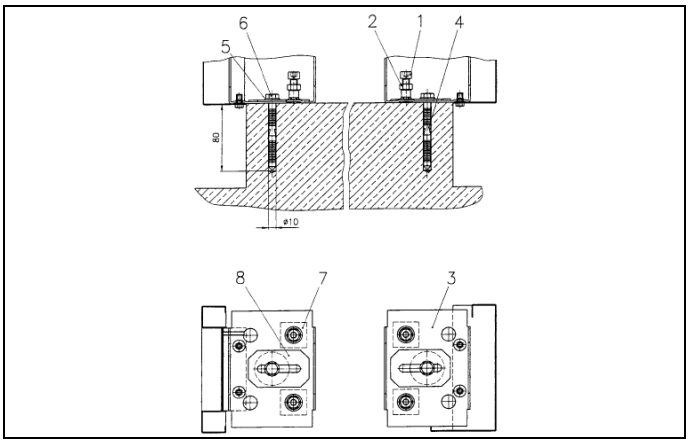

Fixing on feet (optional)
(→see also 4.2 "INSTALLATION PLANS AND CONNECTIONS").
Remove the plastic foot insert on the foot at the bottom (FU). Mark the position of the foot rests (FA) on the floor. Attach the foot rests (FA) by screwing or gluing them on. Place the appliance on the foot rests (FA).

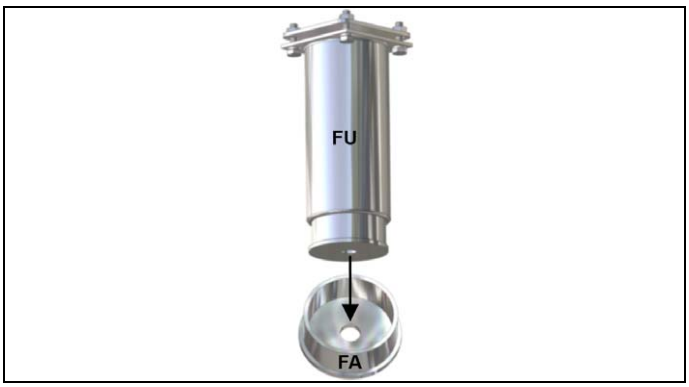

Adjust the height of the foot (FU) by rotating the bottom to the preferred appliance height. Determine and align the horizontal position with a spirit level. The foot can be adjusted from 150 to 200 mm. A height of 200 mm is recommended. This will correspond to an appliance height of 900 mm.

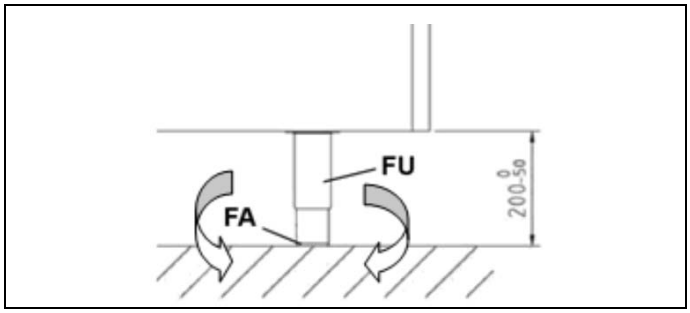

4.6.2 Wall installation: wall-mounted

The best thing to use for the wall appliance is a pallet truck or forklift truck (H) with a stable base or, for example, stacked wooden boards.

Use the original transport pallet (R) to transport the appliance in front of the desired installation position. The pallet truck (H) is to be driven as close as possible to the appliance.

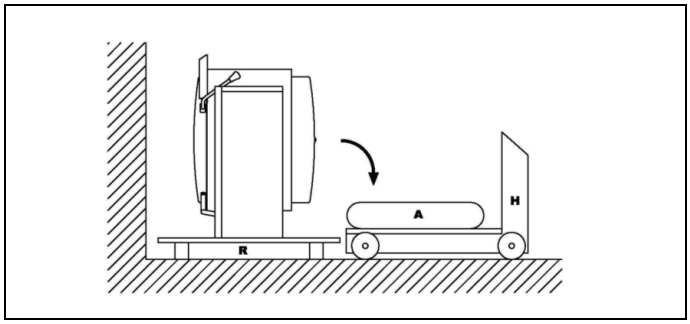

Carefully tilt the appliance onto the stable base (A) on the pallet truck (H) so that it is lying horizontally and move it into the correct position. Remove the transport pallet (R) and dispose of it professionally together with the packaging material.

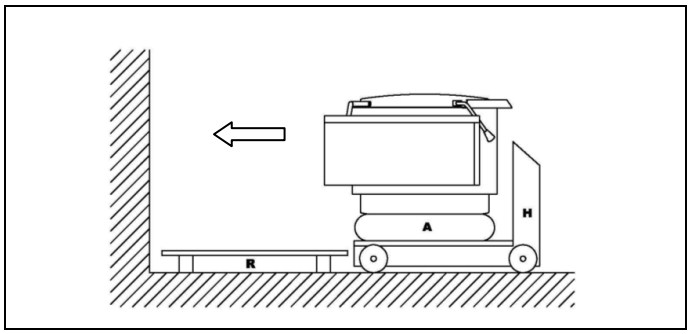

Remove panel cover (A/B) as well as protective coverings (SA) *(→see 4.5 "ACCESS TO THE INSIDE OF THE APPLIANCE").*
Adjust the height using the pallet truck (H). Carefully move the pallet truck (H) carrying the appliance towards the prepared stud bolts in the wall, align it horizontally and secure it. Electrical and water connections as per the description: *(→see 4.8 "ELECTR. CONNECTION") (→see 4.9 "MIXER TAP"*).
When successful installation is complete, re-attach the panel covers (A/B) and the service covers (S3).

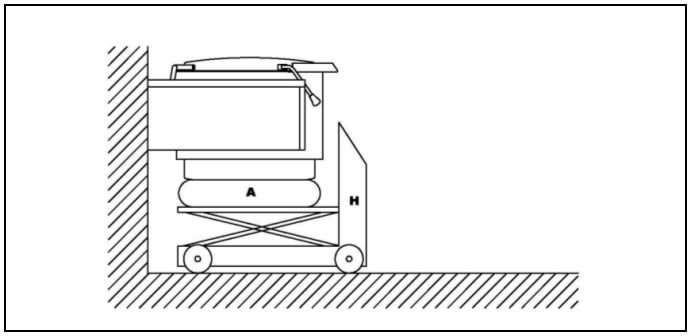

According to the installation plans (*see →4.2.2 Wall-mounted appliances*) the wall anchoring holes must be marked on the wall in advance. Drill boreholes into the wall with a diameter of ø 20 mm and a minimum depth of 135 mm. Then the wall anchors provided are to be affixed using threaded bolts (W). Wall anchors (W) with long threaded bolts must be affixed to the top, wall anchors (W) with short threaded bolts must be affixed to the bottom. Tighten the wall anchor nuts (WM) to a torque of 300 Nm. Then fit nuts (M) and washers (U) and screw in the supporting bracket (E) at a distance of 28 mm. Correctly align all supporting brackets (E) in a row. Level all of the set screws (S) in the supporting brackets (E). Carefully insert the equipment into the wall anchor threaded bolts, level using a spirit level (WA), fasten using washer (U) and nuts (M) and fit the lock nut (KM).

W Wall anchor with threaded bolts
WM Wall anchor nut
M Nut
KM Lock nut
E Supporting bracket
S Adjustment screws with lock nut
U U washer

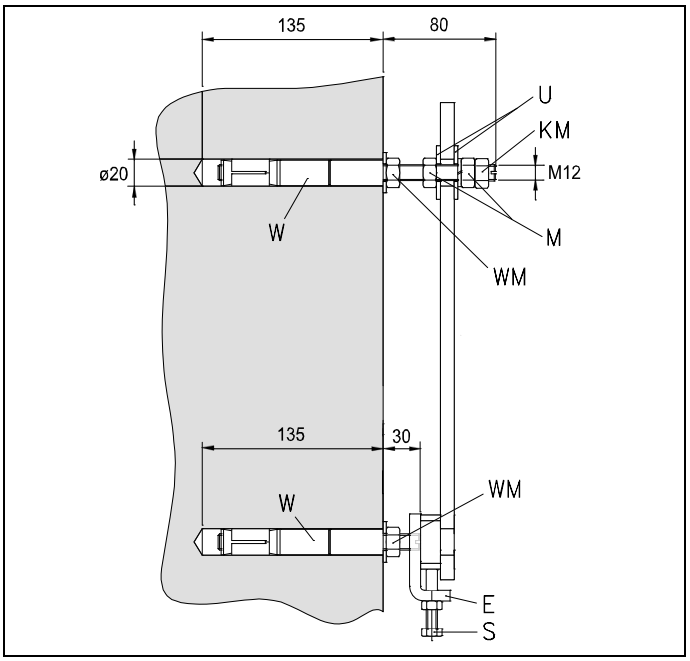

L Ruler
WA Spirit level

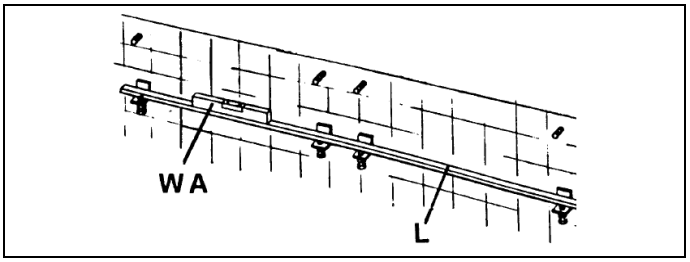

4.7 ASSEMBLING APPLIANCE GROUPS

When installing appliance groups (floor or wall installation, as preferred) each appliance is installed, levelled and fastened individually *(see →sections 4.4 to 4.7).* When installing groups the side walls are not installed but replaced by the supplied cover plate between the panels. The appliance panels are screwed together with the installation set provided, which consists of screws (S), U washers, nuts (M) and spacers (DH) all covered by a panel cover (C/optional).

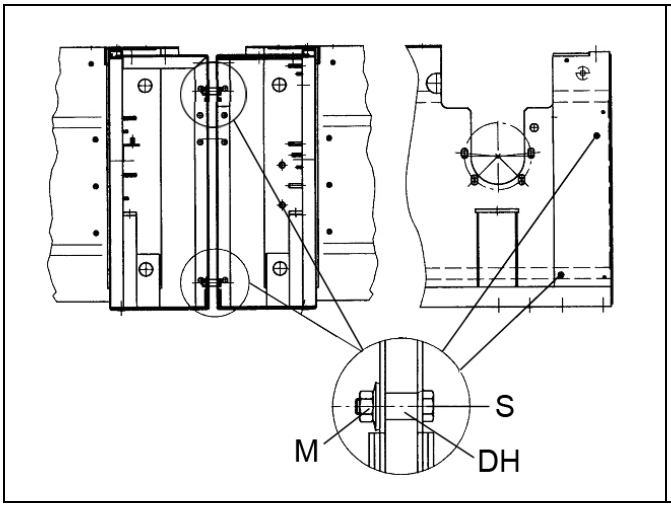

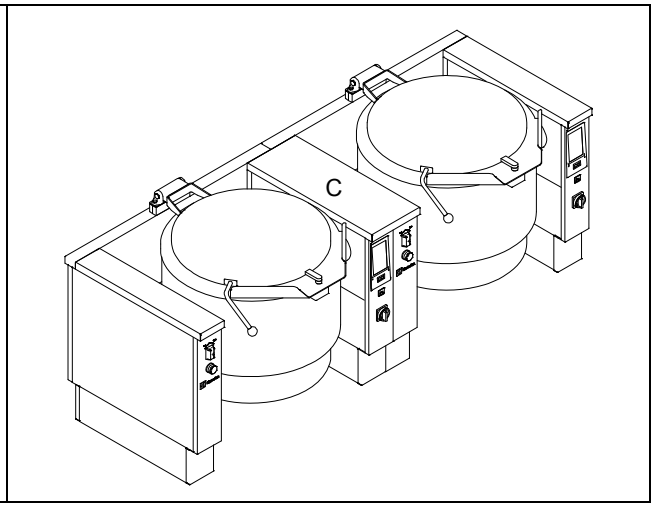

4.8 ELECTRICAL CONNECTION

Each appliance comes with an appliance-specific wiring diagram. The technical specifications (electrical rating, voltage, amperage etc.) are documented here. Check and ensure that the electrical voltage corresponds to the voltage specified on the identification plate.

Be aware:
- Appropriate precautions must be taken at the customer's for the earth wire connection and earthing the appliances.
- The appliance must be connected to a point indicated on a potential equalisation system with a minimum conductor cross section of 10 mm². Use the respectively labelled connector pins.
  When installing the appliances one on top of the other, connect them all together through potential equalisation.
- The appliance should be connected to fixed cables. If the non-plinth appliance is mounted directly on the wall plinth, the supply cable must come out at the prescribed point. The protective tube must not protrude out of the plinth.
  If a CNS base is used, the protective tube may not protrude more than 10 cm from the floor.
- After installation you must ensure that live and insulated parts are protected against accidental contact.
- An all-pole separator with a minimum 3mm contact gap must be provided for installation.
- If leakage current circuit breakers are provided the type that are for a 30 mA rated tripping current >30 mA must be used.
- When using a fault current prevention switch (for the existing prevention switch and for new installations), only an all-current sensitive leakage current circuit breaker may be connected upstream with these appliances.

The alternating current supply for the appliances must fulfil the following conditions:
- Max. voltage fluctuations ± 10%
- Max. frequency fluctuations ± 1% (continuous) or ± 2% (short-term).

The harmonic distortion, the phase imbalance of the three-phase supply, the voltage pulses, power failures, voltage leakages and other electrical characteristics must fulfil the requirements of section 4.3.2 of the EN 60204-1 (IEC 60204-1).

IMPORTANT!
- The appliances must be secured against excess current (short circuits and overloads) by fuses and residual current switches that are appropriate for the load.
- For electric shock protection (depending on the type of power supply and earthing connection to the potential equalisation protection circuit) observe point 6.3.3 of EN 60204-1 (IEC 60204-1). This prescribes the use of a protective device that automatically interrupts the voltage supply in the event of a defect in the insulation of the TN or TT systems. For IT systems, the use of an insulation monitoring device or differential current protective device to cut the power from the device automatically (if there is no protective device available to cut off the power supply in the event of an earthing malfunction, an insulation monitoring device to show any malfunctions must be attached to an active part on the earths or to earth. This device must send out an acoustic and/or visual signal until the malfunction is remedied). For example: in TT equipment a residual current switch with tripping current (for example 30 mA) that is aligned with the earthing device of the building in which the appliances are to be installed is to be installed before the power connections.
- Failure to adhere to the aforementioned instructions invalidates the product warranty that the manufacturer provides for the appliance performance and/or its freedom from defects.
- When connecting PC/ EO it is possible that there is external voltage at the terminals.

4.8.1 Terminal clamps

A Mains supply
G Appliance outgoing lines

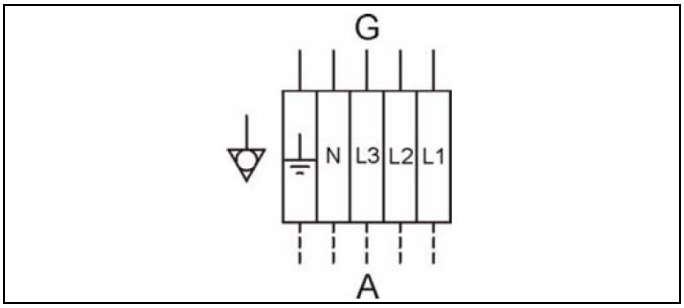

The mains supply is connected via a cable installed during assembly, which protrudes 1.5m out of the floor or wall. The appliance's terminal clamps are under the covering. The front panel (A) must be removed to connect the appliance. *(→see 4.5 "ACCESS TO THE INSIDE OF THE APPLIANCE").* Connect the electricity cable as shown in the electrical diagram. The connector pins on the appliance frame are marked as follows:

Earth conductor: Potential equalisation:

Extra terminal clamps are available for purchase for performance optimisation systems (EO/SI) or potential-free contacts (PC) for monitoring the appliance from the outside. Make the connections as shown in the electrical diagram.

4.8.2 Connecting to a potential equalisation system

The appliance is to be connected to a potential equalisation system with a minimum conductor cross-section of at least 10 mm^2. Use the appropriately labelled terminal clamps (EN 60 335). The connection is comprised of an M6 thread pin and is located on the appliance casing. Make the connections as shown in the following drawing.

1 6 mm cable shoe*
2 M6 nut
3 M6 spring washer
4 M6 washer
5 Stickers *(located on the left and right of the back of the appliance).*

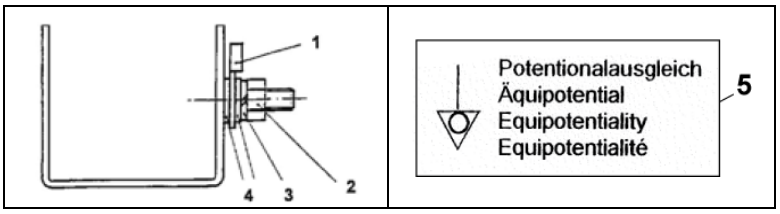

4.8.3 Potential-free contact (PC)

An appliance's potential-free contact does not depend on the performance optimisation (EO). It is necessary to indicate on an external circuit chart, whether the appliance is switched on or not. The terminals are labelled 21 and 22.

4.8.4 Performance optimisation systems (EO/SI)

The purpose of the power monitoring devices is to avoid the occurrence of current load peaks when the appliances are simultaneously under full load.

The following methods apply:
- The appliances are connected to a maximum current relay for the mains which switches off individual appliances or levels according to the settings.
- The performance limiting system prevents power surges without any noticeable impact on the cooking process. By constantly comparing the actual power input of the entire operation with a preset maximum power level, equipment is briefly switched off and then on again according to programming data specific to that appliance.

4.8.5 Wiring

Performance monitoring systems require the following information for all appliances:
- Position of the On/Off switch
- Operational status of thermostats, electrical controllers, etc.
  If an appliance has more than one regulator, each circuit has a separate controlling circuit assigned to it.

This information is delivered via four different cables to the monitoring system.

Cable A indicates the switch-on status (mains switch on or off) of the appliance (voltage 24÷230V) and is attached to the secondary side of the mains switch.

Cable B indicates the operating status (heating on or off) of the appliance and is connected to the thermostat or the controller pcb. Cables A and B should not have different voltages.

Cable C releases the appliance. If the monitoring system releases the appliance, cables B and C are connected by an external contact.

Cable D creates the reference potential for the control voltage for the requested lines.

4.9 MIXER TAP *(optional extra)*

The mixer tap is supplied loose and must be installed on the left-hand appliance panel.

- Thread the mixer tap pipes (9) and the stand pipe (4) through the pre-drilled hole on the left side of the panel cover (8).
- Move the stand pipe (4) to the height required by the customer *(individually adjustable)* and screw onto the clamping collar (6) using an Allen head screw (7).
- Push the collar (5) over the clamping collar (6) and down onto the panel cover (8).
- Fit the swivel arm (1) onto the tap body (3) with the nut (2).

4.9.1 Drinking water connection

- Before connecting the appliance, rinse the water pipes and fittings and remove any dirt.
- Connect hoses (9) to the hot and cold water pipes.
- Do not exceed the maximum water pipe pressure of 6 bars (600 kPa).

4.9.2 Appliance: free-standing or standing against a wall

The water connections come up from the floor or out of the rear wall as desired.
- Feed the hoses through the relevant holes in the base of the frame.
- Remove the front cover on the left (F) and the service cover on the left (S3) *(→see 4.5 "ACCESS TO THE INSIDE OF THE APPLIANCE")*.
- Connect the hoses (9) with a G ½" female thread to the customer's water pipes protruding from the floor. The use of shut-off valves is highly recommended.
- Refit left service cover (S3) as well as the left front panel (F).

4.9.3 Appliance: Wall-mounted

The water connections come out of the wall.
- Remove the left protective cover (SA) *(→see 4.5 "ACCESS TO THE INSIDE")*
- Pull the hoses (9) out of the panel and connect to the customer's water pipes protruding from the wall with a G ½" female thread. The use of shut-off valves is highly recommended.
- Refit the left protective cover (SA).

1 Swivel arm
2 Nut
3 Mixer tap
4 Stand pipe
5 Collar
6 Clamping collar
7 Allen head screw
8 Panel cover
9 Hoses (flexible)

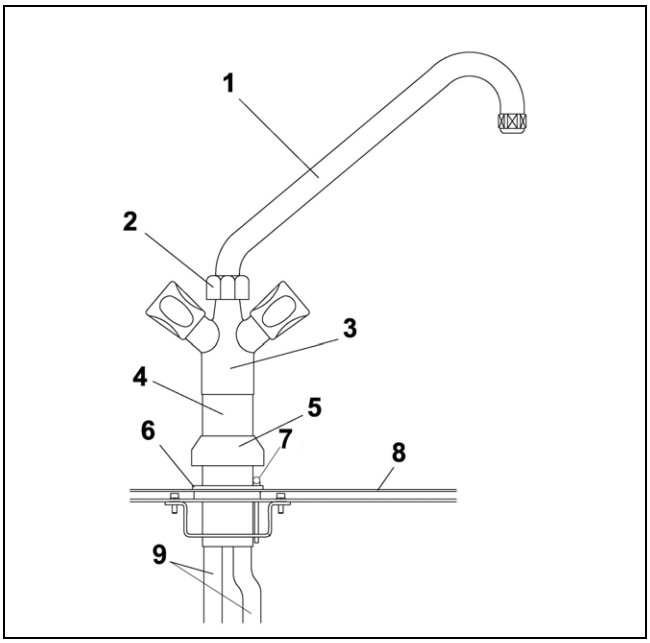

4.10 DUAL CASING

4.10.1 Commissioning

The dual casing is filled with filtered water at the factory as standard. Depending on the delivery date *(refers to the Central European winter months Nov-April)* the dual casing is emptied at the factory and the demineralised water is also supplied in a plastic container in order to prevent frost damage in the heating system. In this case the pan and the plastic canister is provided with a multi-lingual information label.
IMPORTANT: Prior to first use the water level in the dual casing is to be checked and if necessary the dual casing is to be topped up with demineralised water.

4.10.2 Insufficient water in dual casing

Insufficient water in the dual casing may occur for different reasons, for example, as a result of:

- Faulty seals
- Leaking welding seams
- Leaking or faulty safety valves, purging valves and check valves
- Faulty control electronics
- Blocked or fused contactors

Contact Electrolux Customer Service to determine the cause and perform the necessary measures for repair.
If the water level in the dual casing is too low the safety thermostat turns the heat off. The pan is ready for use again by topping up the pan dual casing with demineralised water and switching the pan safety thermostat on again.
After the safety valve test, repair and maintenance work the water level in the dual casing must be checked and topped up if necessary.

4.10.3 Topping up demineralised water

If there is insufficient water in the dual casing the causes must first be determined and remedied.
To prevent corrosion and limescale deposits on the inner surfaces of the dual casing in electrically heated boiling pans only demineralised or distilled water may be used to fill them.

Topping up water:

- You must ensure that there is no pressure in the dual casing (DM).
- Place pan in the fully tilted position.
- Remove the level indicator pipe cover (AN) on the base of the pan's outer casing (DB).
- Remove the cap from the level indicator pipe (RN).
- Move the pan into the horizontal position.
- Remove the safety valve sealing cap (VS).
- Insert a hose into the inlet/ pipe on the safety valve and fill with demineralised water.
- As soon as the water comes out of the level indicator pipe (RN) the water level in the dual casing is correct.
- Replace the seals on the sealing caps (VS/RN) and replace the caps (VS/RN).
- If necessary: Switch the safety thermostat on again.
- Heat the pan and check for leaks.

4.10.4 Draining dual casing

- You must ensure that there is no pressure in the dual casing (DM).
- Remove the base of the pan's outer casing (DB).
- The dual casing can be completely emptied by removing the steam generator sealing stud (VD).

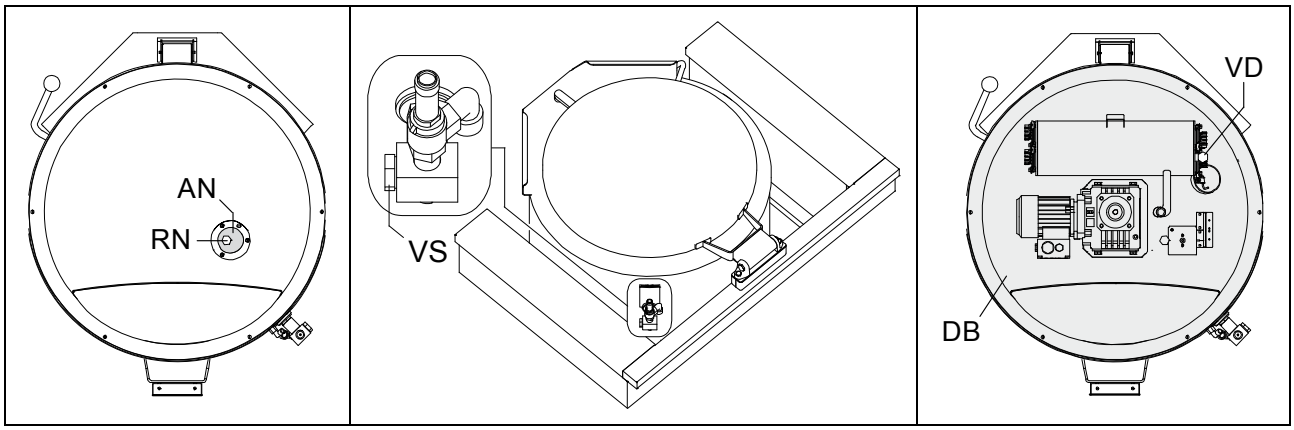

Seen from below *Seen from above* *Seen from below*

5. COMMISSIONING

5.1 PREPARATION

The dual casing is filled with demineralised water at the factory as standard.
Exception: (→*see 4.10.1 "Commissioning the dual casing")*

- Carry out commissioning as per *(→see 6. CHECK LIST: COMMISSIONING)*.
- Before first use the pan must be thoroughly cleaned with hot water containing a mild cleaning agent. Then fill the pan with water and operate at a temperature of 100°C for 30 minutes and then rinse well *(→see also 1.6 CLEANING).*
- Dismantle the drain tap unit *(optional extra, →see 9.3 "Drain tap unit")*, clean thoroughly with a mild cleaning agent, dry and grease lightly with a special odourless, tasteless, food-safe tap grease.
- The appliance is now ready for operation.

To ensure proper, safe use of the boiling pan at all times, a short regular check must be performed on the relevant functional parts. The drain tap *(optional)* must be correctly installed and closed. The TOUCH control user interface must not be damaged.

5.2 ADDING THE FOOD

- The pan must only be filled to the specified maximum fill mark or up to no more than 40 mm below the top pan edge and this must not be exceeded. The quantity selected must be lower with pressure cooking, with mixing mode and depending on the type of food to be cooked in order to prevent foaming over. Improper use *(e.g. filling with food above the maximum fill mark)* may cause burning from boiling liquid spilling or flowing over the edge of the pot.
- Fill with water from the mixer tap or the automatic water filling device.
- Switch on the appliance when it has been filled with food.

IMPORTANT: To prevent corrosion in the boiling pan cooking salt must never be put into the pot when empty. Cooking salt must be dissolved before it is added to the food. Use only wooden or plastic spatulas for stirring.

5.3 TURNING THE APPLIANCE OFF

The appliance is turned off by turning the TOUCH control On/ Off switch *(→see 8.1 "Description of the control panel')* to "0" or by turning the appliance off completely using the main switch (E/optional). All of the displays become inactive.
In the event of a fault the appliance must be disconnected immediately from all supply connections, such as mains power, steam, hot water etc.

E Main switch

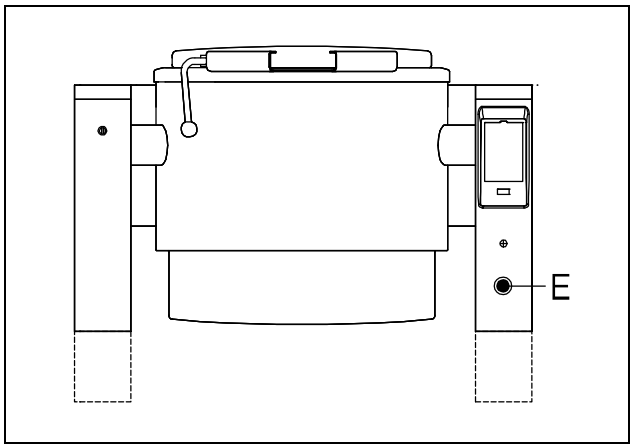

6. CHECK LIST: COMMISSIONING

Inspection	Checked √
Check all gas, water and electrical connections and voltages. *(→4.2 INSTALLATION PLANS)*	
Set the time. *(→see 8.2.2 Default settings)*	
Check appliance electrical control functions. *(→Chapter 8)*	
Check the tilting function. *(→9.1 APPLIANCE TILTING)*	
Functional test: Temperature. *(→8.2.5 Temperature selection in °Celsius).*	
Functional test: Power levels. *(→8.2.6 Temp. selection via power levels)*	
If necessary adjust the electrical control parameters separately. *(→Chapter 8)*	
Check the water level in the dual casing and top up if necessary. *(→4.10 DUAL CASING)*	
Functional test: Stirrer (optional) *(→9.2 Stirrer)*	
Functional test: Stirrer lid switch. *(The stirrer must switch off immediately when the lid is raised.)*	

Inspection	Checked √

Notes & comments:

7. CHECK LIST: MAINTENANCE

Inspection		Troubleshooting ⇒ Remedy
Earth conductor connections ⏚ Potential equalisation connections ⏚ Check all electrical **connections and contacts** to terminals, coils, switches and connections to ensure that they are fully tightened.		If any contacts are loose, ⇒ tighten the connections.
Check **contactors** and **relays** to ensure that the switching function is working. The contacts must be able to be moved slightly without jamming. Check all contactors for scorch marks.		If there are any defects or faults ⇒ replace the contactor or relay.
Measure the individual **phase currents (heater, stirrer motor)** with the clip-in ammeter on the electrical supply cable upstream of the terminal clamps with the appliance fully switched on and compare the currents with the specifications in the electrical diagram.		Identify faulty consumers (heating, stirrer motor) by systematically measuring the individual currents. ⇒Replace in the event of larger deviations.
Check **wiring** for damage.		If lines have defects ⇒ replace the wires
Check the condition and operation of the **TOUCH user interface**.	S	If malfunctions occur, ⇒ determine the cause and remedy it.
Check the condition and operation of the **switches** (emergency Off, main, tilt, lid and control switches).	S	Replace stiff or faulty parts.
Food temperature: Compare display with actual value.		Readjust the display ⇒ if there is a deviation of ≥ 1°C.
Check the condition of all **temperature sensors** (dual casing, food, excess temperature) and electrical connections.		If any of the sensors or electrical connections are faulty ⇒replace the relevant parts.
Check that the **acoustic signal** is working properly by calling up the service test and checking using the initial signal.		If the signal is wrong or there is no signal, ⇒ replace the entire control board.
Check the maximum pressure in the **dual casing** using a pressure gauge.	S	If there is a deviation from the max. target value ⇒ determine the cause of the fault and remedy it.
Check for leaks in the **dual casing**.		If there are leaks and water is pouring out fast ⇒ locate the leaks and seal them.
Check that the **purging valve** is working properly.		In the event of leakage during operation ⇒ clean or replace the vent valve.
Check that the **ventilation valve** is working properly.		In the event of leakage during operation ⇒ clean or replace the vent valve.
Safety valve Carry out functional test and check for corrosion, damage and leakage.	S	If impermissible values occur ⇒ replace the safety valve immediately.
Drain tap (optional): check for damage and leakage.		Clean and grease drain tap. If parts are damaged or leaking ⇒ replace the drain tap.
Check lid for damage.		If the damage is irreparable ⇒ replace the lid.
Check that the **lid bearing** and **gas pressure spring** are working properly.		If they are faulty ⇒ replace them.
Check that the **mixer tap** (optional) is working and doesn't leak. Check water connections.		If the tap is dripping or the supply lines are leaking ⇒ replace seals.
Automatic water filling unit (optional): Check that it is working and is leak tight. Check water connections.		If the tap is dripping or the supply lines are leaking ⇒ replace seals or solenoid valve.
Operate **stirrer** (optional) at all levels and check for irregularities.		In the event of abnormal sounds ⇒ locate the cause, if necessary replace bearing, vibrating element and seal or change the gear motor.

S = safety-related part

Note: This list is only a brief description. A detailed description can be found in the *(→Service Manual)*.
If an increased failure rate of safety-related parts is detected during a service please inform **Electrolux Professional - Customer Services** immediately.

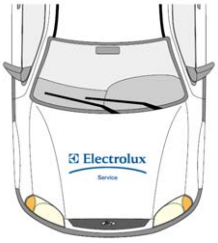

8. OPERATING THE TOUCH CONTROL

8.1 DESCRIPTION OF THE CONTROL PANEL

Touch screen *(touch-sensitive screen):*
All your cooking appliance's operating functions can be performed just by touching the relevant symbols and selecting the functions directly.

Appliance ON/OFF switch
to switch your cooking appliance on and off.
(If a main switch [optional] is connected upstream this must be switched on).

USB connection for data transfer via USB *(Universal serial bus).*

8.2 OPERATING THE MAIN FUNCTIONS

8.2.1 Main selection menu

Main selection menu
Select from three main areas:
- Manual,
- Programmes,
- Default settings.

8.2.2 Default settings

(→Select Settings from the main selection menu)

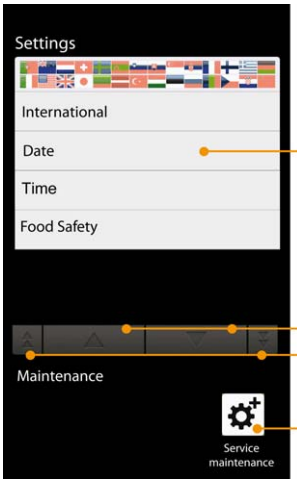

Default settings for:
Language, date and format, time, sound, food safety (HACCP), programmes etc.

Scroll buttons (move the window content up or down)
Start / End scroll buttons

Maintenance (password-protected area)

8.2.3 Manual

(→Select Manual from the main selection menu)

Manual: Define cooking processes.
Programme and define **multiple cooking phases**.
Cooking symbols (≤ 110°) Standard boiling pan functions.

Actual temperature value
Target temperature value

Cooking after setting a time or continuous cooking.
Target cooking time value/ Continuous cooking ∞

Start the pre-defined cooking process
Additional settings for: Delayed start, soft cooking saving programmes, stirrer.

8.2.4 Phase

(→Select Phase from the submenu)

Number of programmed cooking phases/ cycles

Display of individual cooking phases (Type of cooking process, value in °C, power stages (ϟ), time in hours/ minutes or ∞ continuous, deleting individual cooking phases).
Insert new cooking phase

Save cooking programme

Start and trigger or stop the required cooking process.

8.2.5 Temperature selection (in °Celsius)

Target temperature value in °Celsius.

Select **target value in °C**.

Show/ hide **numeric keypad**.

Switch between: Target temperature value [Box inactive = grey] **and power level selection** [Box active = coloured blue, see row of pictures below, middle picture].

8.2.6 Temperature selection (via power levels 1 - 9)

Target temperature value via power level selection 1-9 (Values from 1 - a max. of 9 are accepted).

Select value for power level selection from 1 - 9. Level 1 ≙ 11 %, Level 2 ≙ 22 % heating power, Level 9 ≙ 100 % heating power
Switch to power level selection [Box must be active = coloured blue].

8.2.7 Selecting cooking time (entering time value and continuous cooking)

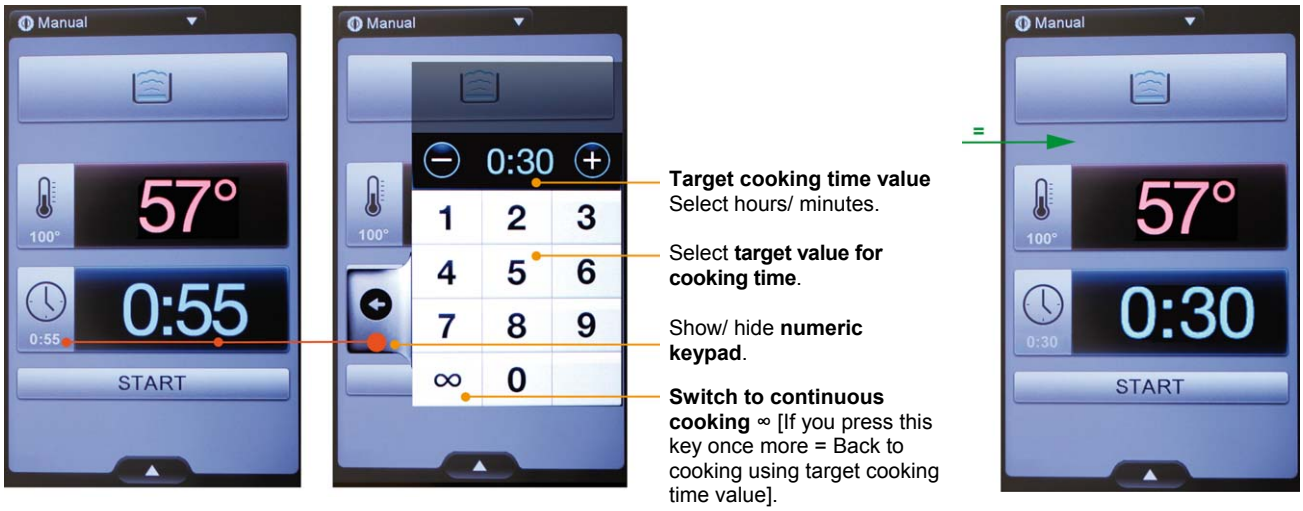

8.2.8 Additional settings: Delayed start

(→Select using the pop-up menu [Active field position right at the bottom])

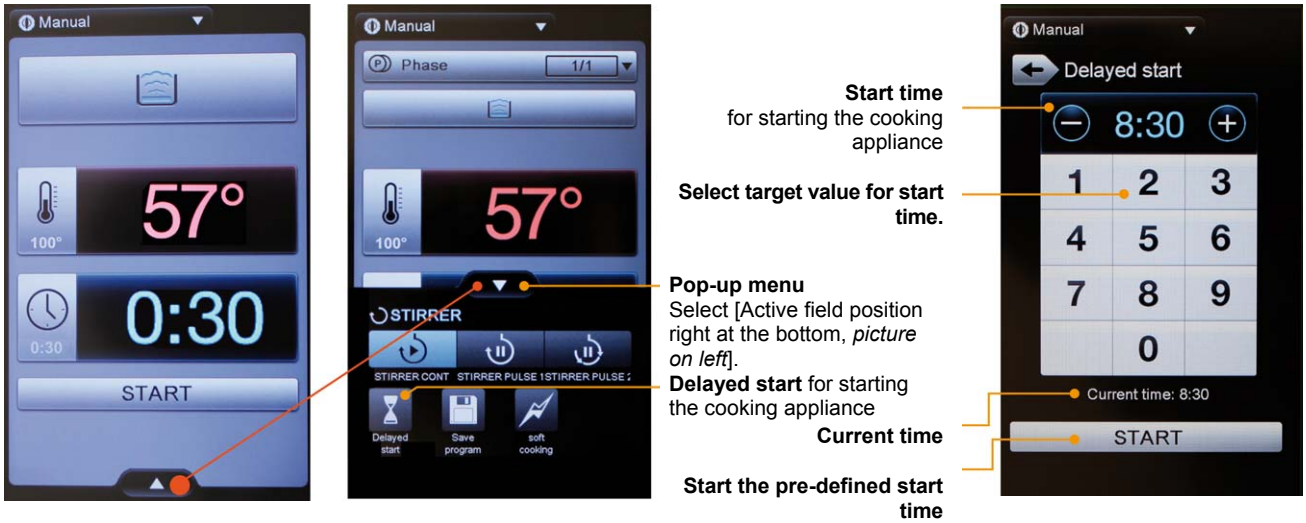

8.2.9 Additional settings: Soft boiling

8.2.10 Additional settings: 8.2.10 Stirrer modes 1-3 with stirrer

*(*Assumes boiling pan fitted with stirrer)*

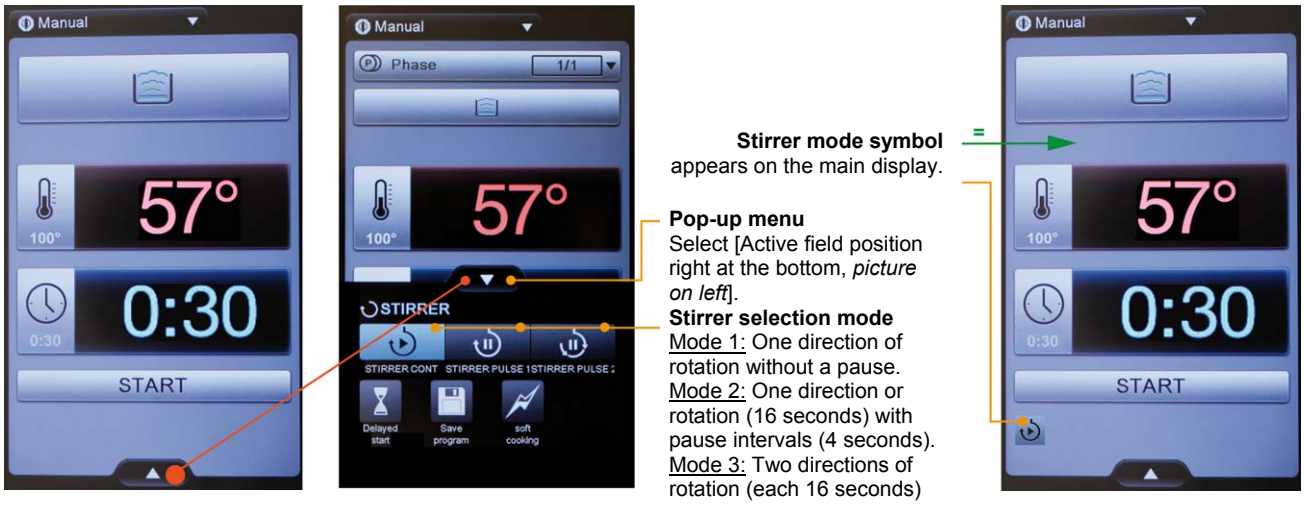

Stirrer mode symbol appears on the main display.

Pop-up menu
Select [Active field position right at the bottom, *picture on left*].

Stirrer selection mode
Mode 1: One direction of rotation without a pause.
Mode 2: One direction or rotation (16 seconds) with pause intervals (4 seconds).
Mode 3: Two directions of rotation (each 16 seconds) with pause interval in between (4 seconds).

8.2.11 Additional settings: Saving programmes

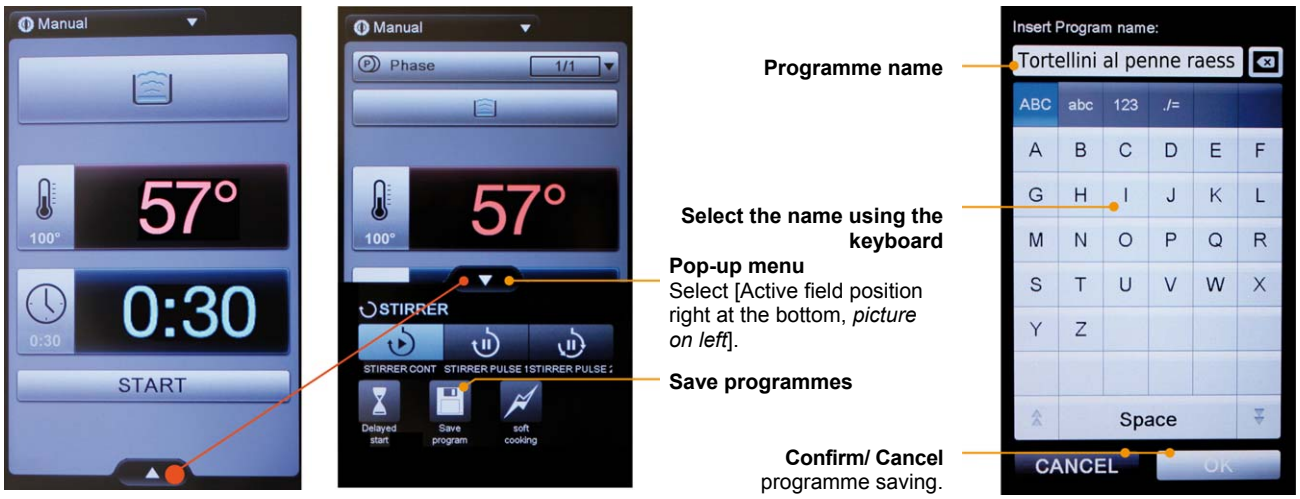

Programme name

Select the name using the keyboard

Pop-up menu
Select [Active field position right at the bottom, *picture on left*].

Save programmes

Confirm/ Cancel programme saving.

8.2.12 Programmes

(→Select programmes from the main selection menu)

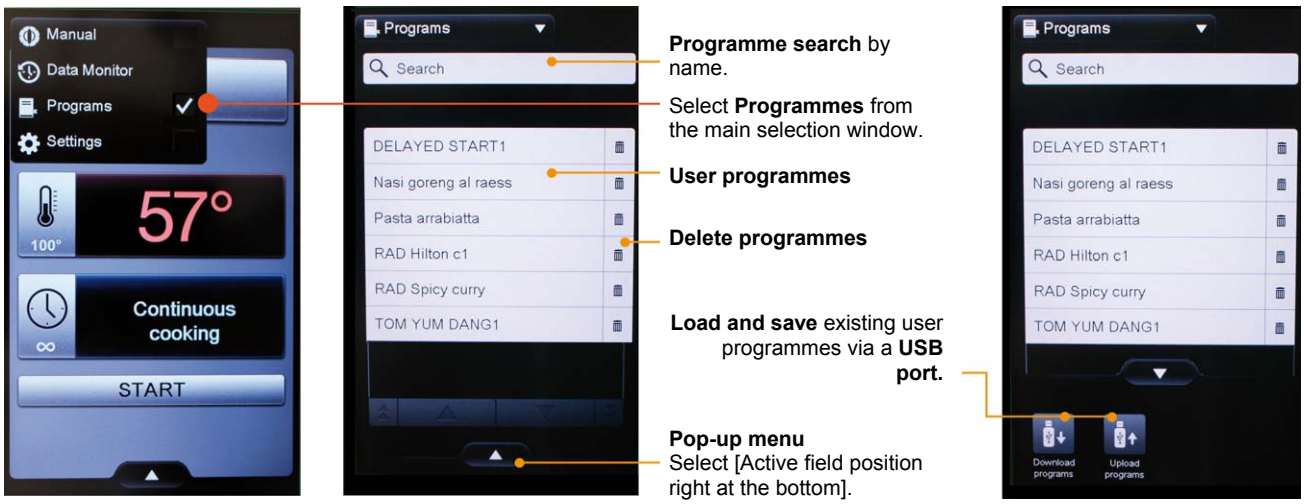

Programme search by name.

Select **Programmes** from the main selection window.

User programmes

Delete programmes

Load and save existing user programmes via a **USB port.**

Pop-up menu
Select [Active field position right at the bottom].

8.3 OPERATION AND METHODS OF YOUR COOKING APPLIANCE

8.3.1 Cooking with target value temperature and cooking time

The cooking appliance heats up to the required target temperature at full heating power.
After the target cooking temperature has been reached the temperature is maintained for the pre-selected cooking time.
(*The active heating phase symbol goes out or is hidden as soon as the required target temperature is reached).

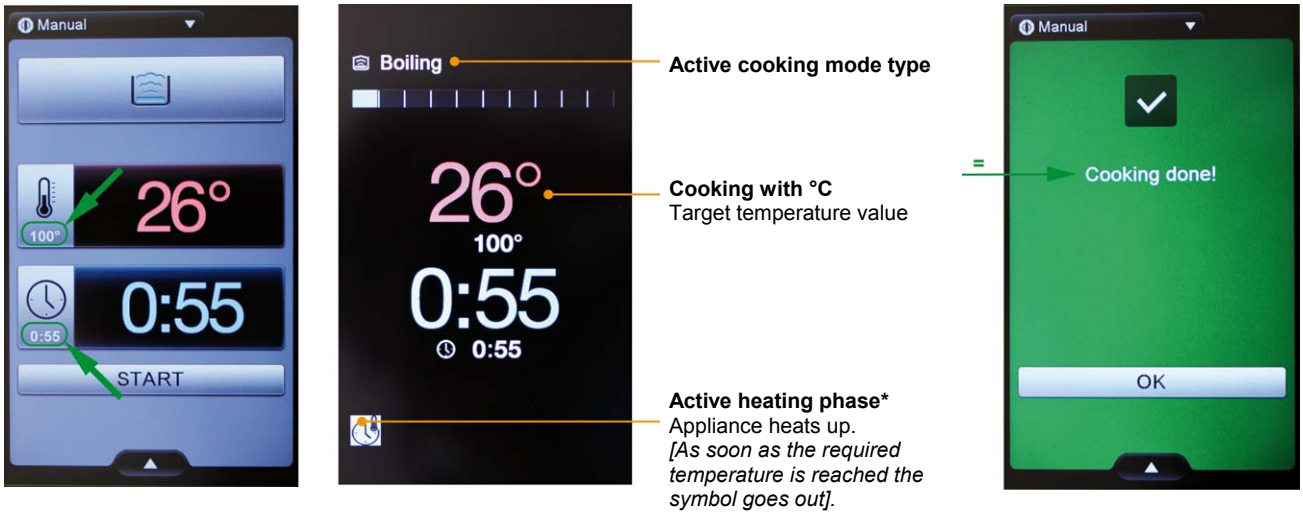

8.3.2 Cooking with target value power levels and cooking time

By default the cooking appliance heats up to 95° Celsius at full heating power and then follows the required power level for the pre-selected cooking time. This cooking mode is suitable for Boiling and/or Continuous cooking, Hold, for example, water, at a high, medium or low cooking level.

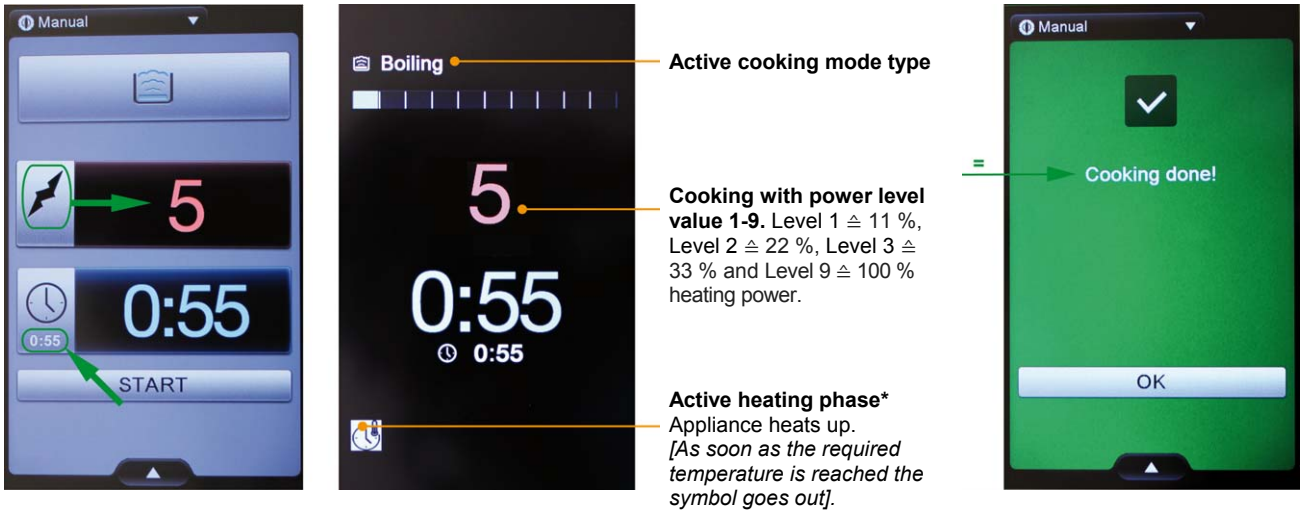

8.4 ERROR AND ALARM MESSAGES

Any error or alarm messages and a brief description of them are displayed on the TOUCH display.
There is also an audible signal at the same time. The following symbol then appears on the TOUCH display.

9. OPERATING THE SUB-SYSTEMS

9.1 APPLIANCE TILTING

The tilting feature may only be used if the stirrer tap swivel arm is in the correct position *(facing the front)*, the lid is fully open and if there is nobody or any object in the tilting area under the appliance. The pan is tilted by turning the tilting handle *(G, →see 2.1 Appliance overview)* clockwise *(to the right)*. The pan is tilted back to its original position by turning the handle anti-clockwise *(to the left)*. The pan tilts at a variable speed depending on how long the tilting handle (G) is held in the tilting position*(to the right)*. When you release the tilting handle (G) it springs back to its neutral central position and the pan remains permanently *(regardless of the quantity or food inside it)* in the relevant position, i.e. the pan pauses due to the drive's self-locking mechanism. When the pan is tipped out of the horizontal position the heating element is temporarily switched off. Do not tilt the pan any further than necessary for letting the liquid pour out of the pan's outlet. You can adjust this easily by varying the tilting speed. Avoid allowing liquid to pour over the edge of the pan *(→see 1.4.5 Safety).* The tilting handle itself must not be repaired.

9.2 STIRRER *(optional extra)*

Use the stirrer to achieve even temperatures and to stir the food thoroughly. This will give you homogeneous cooking results throughout the pot. The boiling pot can be operated with/without the stirrer.

9.2.1 Inserting the stirrer

The stirrer (RW) is inserted onto the drive shaft (W) when the lid (D) is open and the appliance is turned off. The square end of the drive shaft (W) is completely inserted into the square-cut opening of the stirrer (RW). To fix the stirrer (RW) in place the catch on the stirrer (RW) is moved to the horizontal position where it clicks into the two ridges in the square part of the drive shaft (W). When removing the stirrer (RW), push the catch over to the other side horizontally and lift the stirrer (RW) upwards and off the drive shaft (W). *(→see the picture on the next page).*

Grille stirrer with spatula: The grille stirrer is used to mix the food to ensure that it cooks evenly.
Use the spatulas to scrape off food from the side of the pot and mix it back in. The spatulas are made from PTFE (Teflon) and are fit for use with food.

9.2.2 Operating the stirrer

The stirrer is operated using the electronic TOUCH control. See also description *(→8.2.10 Stirrer mode for stirrer).*
The required stirrer mode is selected depending on the type of food.

	Lid is open	It is not possible to operate the stirrer when the lid is open. The lid must be closed for the stirrer to operate.
	Stirrer mode I	One direction of rotation, continuously clockwise without stopping (*liquid food).*
	Stirrer mode II	One direction of rotation for 16 seconds clockwise with a pause of 4 seconds.
	Stirrer mode III	Three directions of rotation each for 16 seconds with pauses of 4 seconds in between *(for thick liquid, difficult to mix food).*

9.2.3 Safety measures

- Always keep the lid closed *(A, →see 2.1 Appliance overview)* while the stirrer is operating.
- If there is a short power cut the active cooking process starts again automatically.
  Then the stirrer also starts again automatically.
- While the stirrer is in use, do not put any items in the pot (*spoons, measuring stick, etc.*).
- The stirrer must not be used for fragmenting, splitting or chopping solid food such as ice, bones or fruit stones as any chips flying out could pose a considerable danger for the safety of personnel *(→see 1.4.4 Intended use)*

- **In the event of malfunctions, the stirrer getting stuck or unusual noises occurring press the "Stirrer activated" (R) symbol or the "Appliance ON/OFF switch on the TOUCH control display immediately to stop the stirrer. The stirrer must then not be used any longer.**
  The stirrer must not be switched on again until it has been serviced.
- When the drive motor is overloaded the thermal protection switch switches the stirrer off.
  Only after the protection switch has cooled down can the stirrer be restarted again.
- If the drive motor frequently becomes overloaded and switches off, the food is too solid. Operation can be continued by diluting the food or removing some of it from the pan.

Stopping the stirrer in an emergency: The stirrer is turned off by pressing the "Stirrer activated" (R) symbol on the display, by pressing the "Appliance ON/OFF button" on the TOUCH control or by pressing the emergency stop button (NA). The emergency stop button remains pressed in until it is turned clockwise and unlocked.
The stirrer is turned on again with the TOUCH control. *(→see 8.2.10 Stirrer mode)*

9.2.4 Lid safety switch *(only with stirrer)*

The stirrer safety switch (RD) comprises a coded magnet (*mounted on the lid*) and the switch (*fitted in the pan*).
The function of the safety switch (RD) is to switch the stirrer off automatically as soon as the lid is opened during operation. **WARNING: No modifications of any kind may be made to the safety switch. Any kind of modification to a safety-related part puts the safety of people and the appliance at considerable risk. This is expressly forbidden.**

9.2.5 Emergency stop switch *(only with stirrer)*

The emergency stop switch (NA) is located in the top part of the left panel *(→see picture below)*.

Stopping the stirrer in an emergency:

- The stirrer stops operating immediately the emergency stop button (NA) is pressed. In this case the whole TOUCH control unit is switched off *(inc. heating and TOUCH control).*
- The stirrer (RW) remains switched off.
- Unlock the Emergency Off switch (NA) by turning the switch handle clockwise.
- The stirrer (RW) is turned on again with the TOUCH control.

R **Stirrer active**

RW **Stirrer**
W **Shaft**
BO **Base scraper**
SE **Side scraper**

NA **Emergency stop switch**

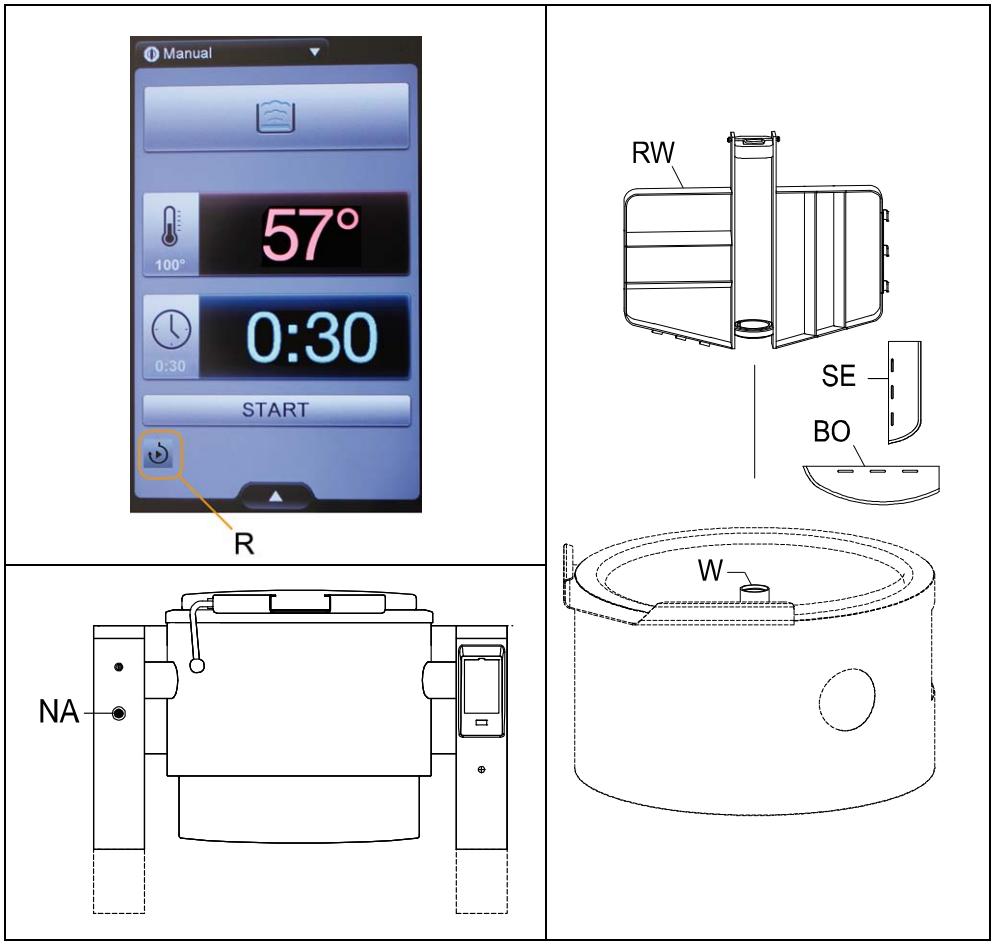

9.3 DRAIN TAP *(optional extra)*

The tilting boiling pan does not normally need a drain tap. The drain tap is only available as an option *(only when ordered with the appliance, cannot be retrofitted)* . The drain tap (EH) is used to meter the liquid to be drained precisely or to pump the liquid out using the automatic emptying systems or to empty it into containers.

9.3.1 Removing food

The drain tap (EH/) is closed when the handle (H) is in the far right position and it is folded under. In this way it is also safeguarded against accidental opening.
The unit (EI) must not be removed from the drain tap (EH) while food is being removed.

Opening the drain tap in order to remove food:
- Fold the handle (H) upwards
- Turn the handle (H) to the left.

Closing the drain tap in order to remove food:
- Turn the handle (H) to the right.
- Fold the handle (H) down.

9.3.2 Removing the drain tap

To remove:
- Uncrew Allen head screw (IS) from the main nut (MK).
- Uncrew main nut (MK) and remove drain tap (EH).

Installation:
- Refit the drain tap (EH) in the reverse order from removing.

9.3.3 Servicing the drain tap

Removing the unit (EI) :
- Open the drain tap (EH) by turning it clockwise until the first stop.
- Lift the unit (EI) and turn it further until the next stop.
- Press unit (EI) downwards and turn further until the next stop.
- Lift up unit (EI) and remove.
- Clean the drain tap (EH) and the unit (EI)
- Lightly grease the drain tap (EH) and unit (EI) with odourless and tasteless non-toxic special lubricant for taps and fittings.

  Special grease for taps and fittings (for tap with seal/ O ring) = **Order number: 0G5343 (1 102 2465)**
  Lubricant for taps with metal seals (for taps without seal/O-ring) = **Order number: 0G5344 (1 102 2466)**

Installing the unit (EI):
- Refit the drain tap (EH) in the reverse order from removing.

EH Drain tap
H Handle
EI Rack
MK Main nut
IS Allen head screw
D Seal

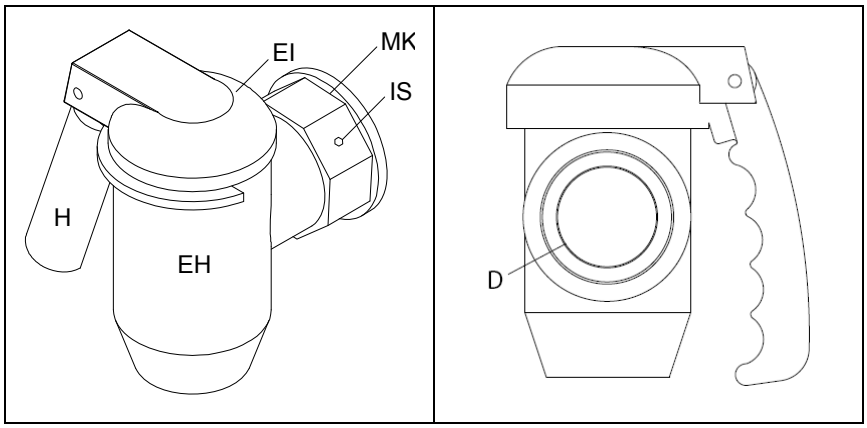

10 ACCESSORIES

Measuring stick
Hang the measuring stick from the top edge of the pot - for round pots with built-in measurement scale. The scale has a ‘10 litre graduation’ for pots with a volume of 200 litres, or a ‘50 litre graduation’ for pots with a volume of 300 litres. The measuring stick must not be used together with the stirrer due to risk of injury.

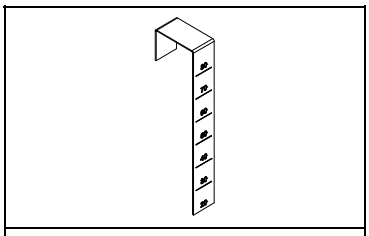

Sieve for the outlet valve
Putting an outlet sieve in the pot’s outlet pipe prevents blockages in the outlet tap when releasing liquids from the pot.
A rod with a hook is provided for inserting and removing the sieve unit.

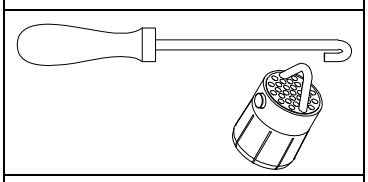

Base sheet, perforated
Baskets and other units can be placed on the base sheet.

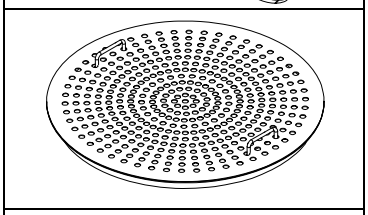

Basket insert
Stackable baskets allow food to be gently steamed.

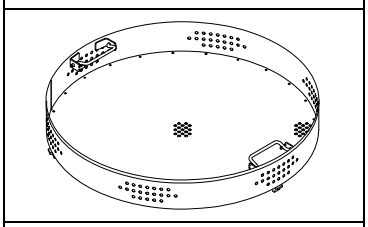

Sieve and scraper
You can make gnocchi shapes with this accessory which hangs in round and square pots. The dough is placed inside a sieve (1) and the scraper (2) moves backwards and forwards to push it through the sieve holes.
The mixture falls into the hot water in the pot.

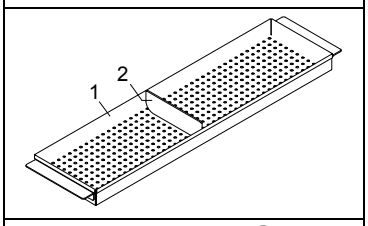

Mixer tap
You can install a hot and cold tap on the left panel.
Only available when ordered with the appliance. It cannot be retrofitted.

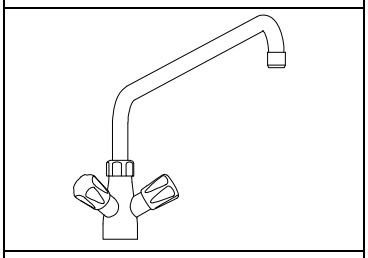

Water sprinkler/ spray gun
You can install a water sprinkler on the left panel.
Only available when ordered with the appliance. It cannot be retrofitted.

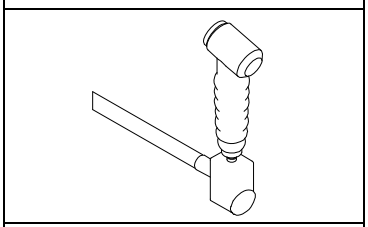

Drain tap
All pots can be fitted with a drain tap.
Only available when ordered with the appliance. It cannot be retrofitted.

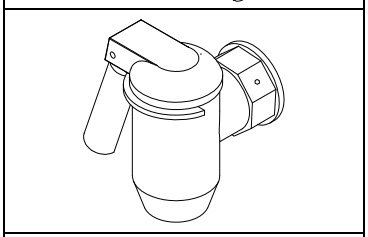

Automatic water filling device
The automatic water flow feature fills the pan with a preselected amount of water.
Only available when ordered with the appliance. It cannot be retrofitted.

©2012 Electrolux Professional AG | Tech.Docu Services | CH - 6210 Sursee/Schweiz